EHV
POWER CONNECTORS

Product
Catalogue

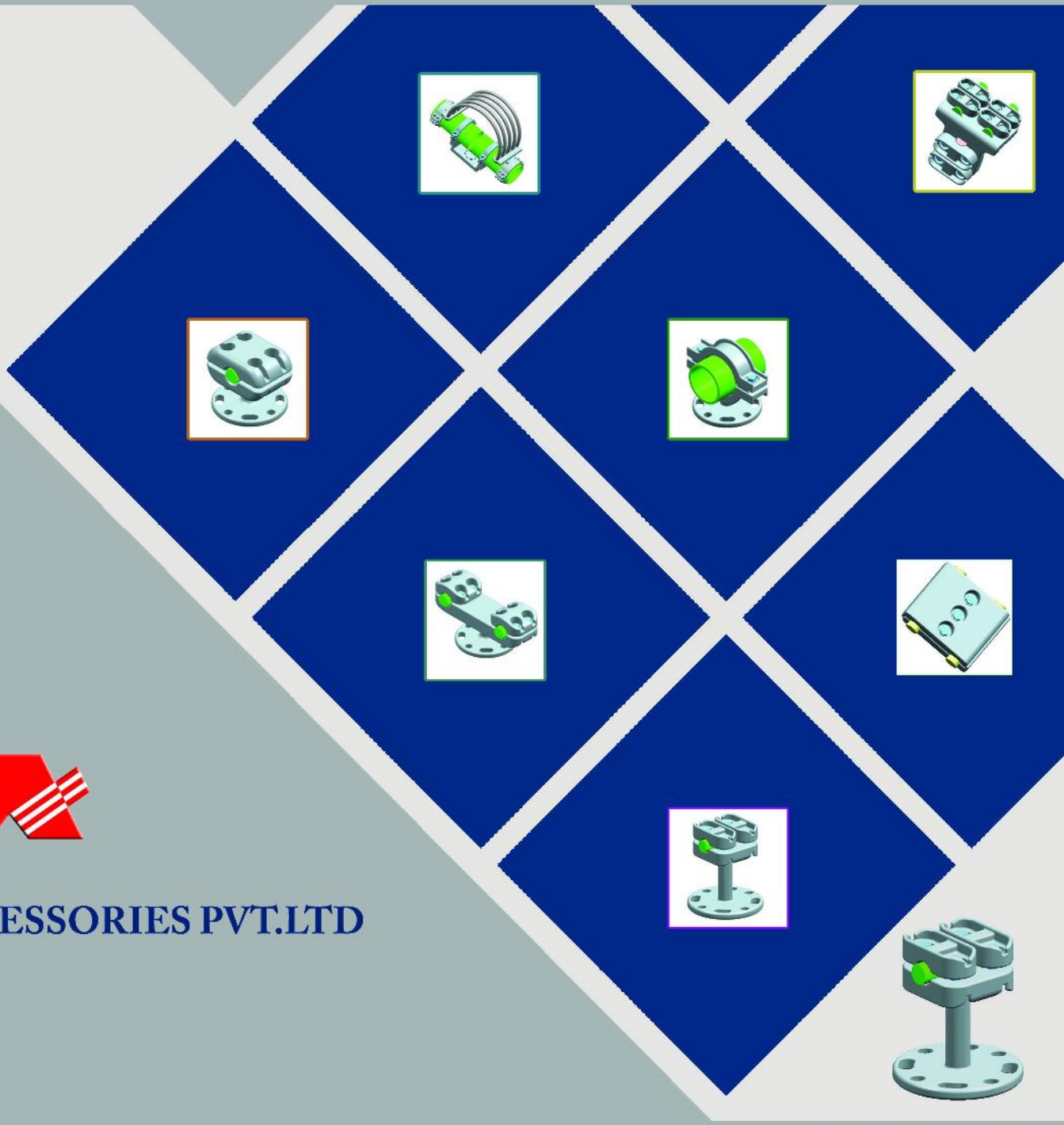

ADARSH LINE ACCESSORIES PVT.LTD

ADARSH LINE ACCESSORIES PVT. LTD

CONNECTORS FOR EHV SUB STATIONS

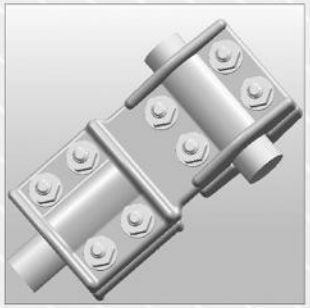

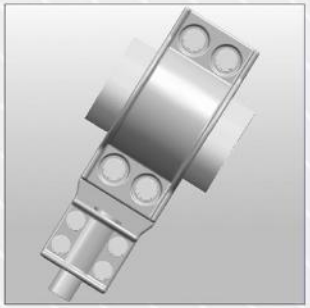

CONNECTORS 145,245&330kV

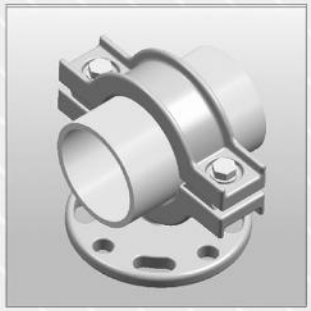

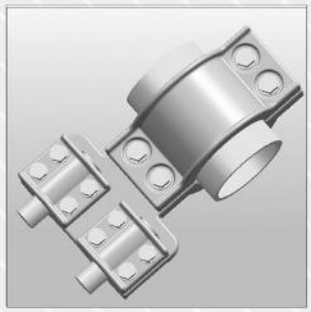

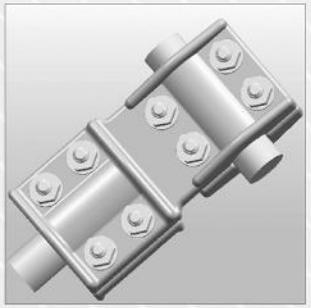

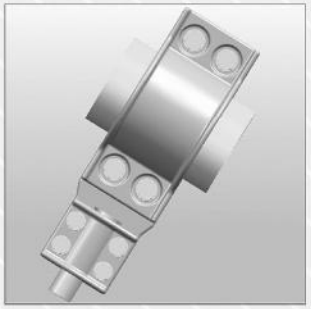

SL.NO.	TITLE	Page No.
I.	Introduction	VI
II.	Technical Information	VII
III.	Erection Instruction	VIII
IV.	Marking of Connectors	IX
V.	Purchase Specifications for Connectors	X
VI.	Index of 145 kV Connector Range	
	I. Busbar Connectors	
	a. Tee Connector	
	i. Conductor to Conductor - through	01
	ii. Tube to Conductor	02
	iii. Tube to Twin Conductor (Type-1)	03
	iv. Tube to Twin Conductor (Type-2)	04
	b. Parallel Connectors	
	i. Conductor to Conductor	05
	ii. Tube to Twin Conductor	06
	c. Spacers	
	i. Twin Conductor	07
	ii. Quad Conductor	08
	d. Post Insulator Clamps	
	i. Rigid Clamps on PI - Conductor	09

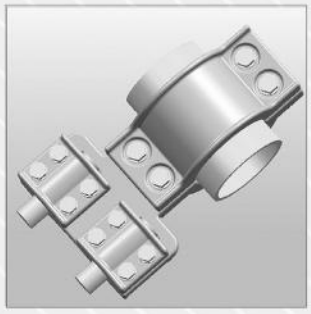

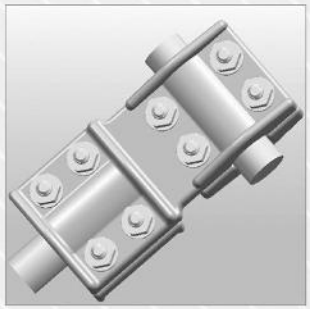

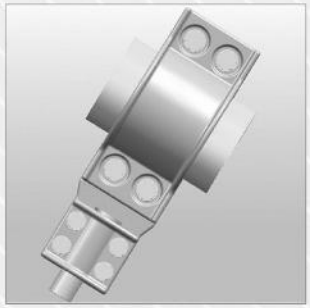

SL.NO.	TITLE	Page No.
	ii. Rigid Clamp on PI-Twin Conductor	10
	iii. Rigid Clamp on PI - Tube	11
	iv. Sliding Clamp on PI - Tube	12
	v. Rigid Bus Coupler on PI	13
	vi. Expansion Bus Coupler on PI	14
	e. Straight Connectors	
	i. Tube to Tube	15
	II. Terminal Connectors	
	a. Terminal Connector - Stud	
	i. Stud to Conductor - Horizontal	16
	ii. Stud to Conductor - Vertical	17
	iii. Stud to Twin Conductor - Hoz.	18
	iv. Stud to Twin Conductor - Vertical	19
	v. Stud to Tube - Vertical (Type-1)	20
	vi. Stud to Tube -Expansion	21
	vii. Stud to Tube - Vertical (Type-2)	22
	b. Terminal Connector - Pad	
	i. Pad to Conductor - Horizontal	23
	ii. Pad to Conductor - Vertical	24
	iii. Pad to Tube - Horizontal	25
	iv. Pad to Tube - expansion	26
	III. Grounding Clamp, End Cap & Corona Bell	
	i. Grounding Clamp	27

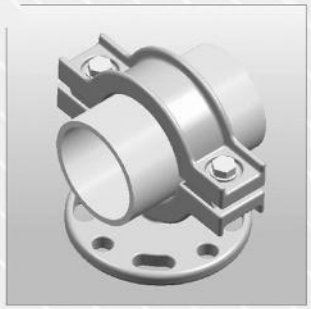

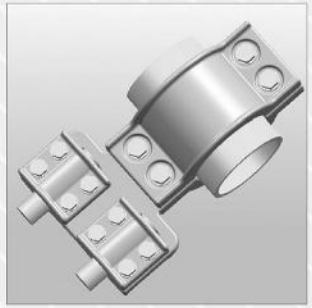

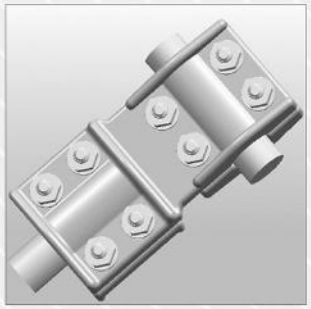

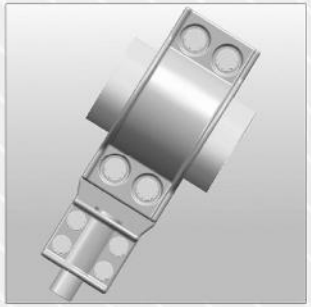

SL.NO.	TITLE	Page No.
	ii. End Clamp	28
	iii. Corona Bell	29
X.	Index of 245 kV Connector Range	
	I. Busbar Connectors	
	a. Tee Connectors	
	i. Conductor to Conductor - Through	01
	ii. Tube to Conductor	02
	iii. Tube to Twin Conductor (Type-1)	03
	iv. Tube to Twin Conductor (Type-2)	04
	b. Parallel Connectors	
	i. Conductor to Conductor	05
	ii. Tube to Twin Conductor	06
	c. Spacers	
	i. Twin Conductor	07
	ii. Quad Conductor	08
	d. Post Insulator Clamps	
	i. Rigid Clamps on PI - Conductor	09
	ii. Rigid Clamp on PI-Twin Conductor	10
	iii. Rigid Clamp on PI - Tube	11
	iv. Sliding Clamp on PI - Tube	12
	v. Rigid Bus Coupler on PI	13
	vi. Expansion Bus Coupler on PI	14
	e. Straight Connectors	

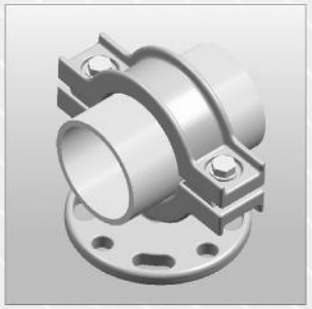

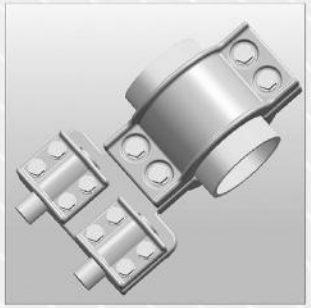

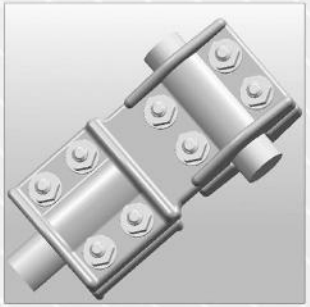

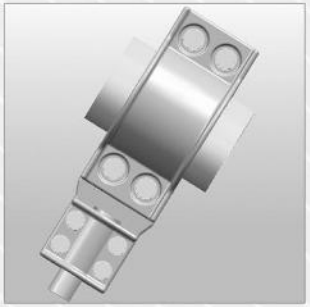

SL.NO.	TITLE	Page No.
	i. Tube to Tube	15
	II. Terminal Connectors	
	a. Terminal Connector - Stud	
	i. Stud to Conductor - Horizontal	16
	ii. Stud to Conductor - Vertical	17
	iii. Stud to Twin Conductor - Hoz.	18
	iv. Stud to Twin Conductor - Vertical	19
	vi. Stud to Tube - Vertical (Type-1)	20
	vii. Stud to Tube -Expansion	21
	viii. Stud to Tube - Vertical (Type-2)	22
	b. Terminal Connector - Pad	
	i. Pad to Conductor - Horizontal	23
	ii. Pad to Conductor - Vertical	24
	iii. Pad to Tube - Horizontal	25
	iv. Pad to Tube - expansion	26
	III. Grounding Clamp, End Cap & Corona Bell	
	i. Grounding Clamp	27
	ii. End Clamp	28
	iii. Corona Bell	29
XI.	Index of 330 kV Connector Range	
	I. Busbar Connectors	
	a. Tee Connector	
	i. Conductor to Conductor - through	01

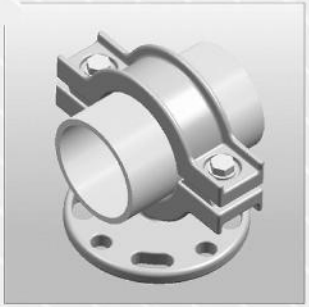

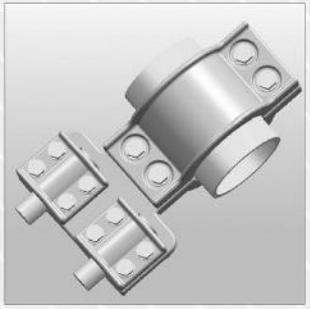

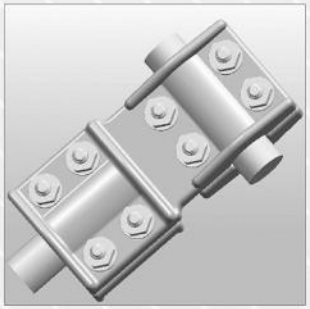

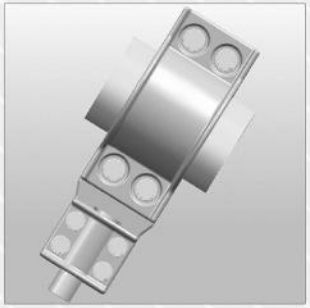

SL.NO.	TITLE	Page No.
	ii. Tube to Twin Conductor (Type-2)	04
	b. Parallel Connectors	
	i. Conductor to Conductor	05
	ii. Tube to Twin Conductor	06
	c. Spacers	
	i. Twin Conductor	07
	d. Post Insulator Clamps	
	i. Rigid Clamp on PI- Twin Conductor	10
	ii. Sliding Clamp on PI - Tube	12
	iii. Rigid Bus Coupler on PI	13
	iii. Expansion Bus Coupler on PI	14
	e. Straight Connectors	
	i. Tube to Tube	15
II.	Terminal Connectors	
	a. Terminal Connector - Stud	
	i. Stud to Twin Conductor - Hoz.	18
	b. Terminal Connector - Pad	
	i. Pad to Tube - Horizontal	25
III.	Grounding Clamp, End Cap & Corona Bell	
	i. Grounding Clamp	26
	ii. End Clamp	27
	iii. Corona Bell	28

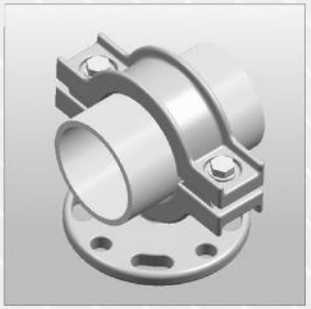

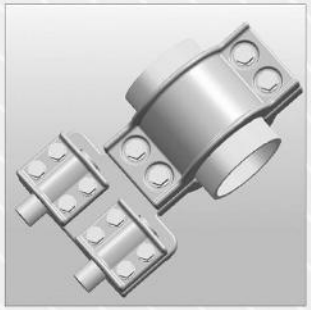

INTRODUCTION

ADARSH LINE ACCESSORIES (P) LTD. has been in the business of Design, Testing, Manufacturing and Export of EHV Clamps & Connectors since 1998, for Export to Malaysia. ADARSH has since expanded its MARKET to other Countries like Myanmar, Brunei, Cambodia, Lithuania, Vietnam, Estonia, Saudi Arabia, Oman, etc.ADARSH Clamps have found wide acceptance in these countries as also in other Countries like PNG, Ivory Coast, etc. where our customers have executed Sub-Station contracts.

The company is located in the southern state of Tamil Nadu in India. ADARSH Plant in Chennai is the base for the Assembly & Testing of EHV Power Connectors. ADARSH's Integrated Management Systems are certified for ISO 9001, ISO 14001 and ISO 45001 -2018 for Quality Environment and Health & Occupational Safety.

TECHNICAL INFORMATION

01. Reference Standards

ADARSH Connectors are designed to the following standards

- B. S. 159
- I. S. 5561
- ANSI/ NEMA CC1

Design & Supply can be made as per customer requirements/Specification.

02. Types of Connectors

(a) Bolted Type
(b) Compression Type

03. Rating of Connectors

(a) System Voltage	-	Upto 500 kV
(b) Continuous Current	-	Upto 6000 A Higher Ratings can be supplied.
(c) Short Time Rating	-	Upto 63 kA for 3 Secs

04. Range of Connectors

- Tee Connectors
- Parallel Groove Connectors
- Bus Supports
- Bus Couplers
- Rigid & Expansion Type Connectors for Busbars & Equipments
- Spacer Clamps
- Earthing Connectors
- Any other Special Type to suit customer requirement can be designed and supplied

05. Type Tests

ADARSH Design has been validated by carrying out Type Tests at

- Central Power Research Institute(CPRI), Bhopal, India (a STL Laboratory)
- Global Power Research Laboratory, Vadalur, India(a ISO/IEC 17025 NABL, Approved HV Laboratory)
- Electrical Research and Development Association, Vadodara.

The following Type Tests have been carried out

Description of the Test	Tested Value	Test Standards
Short Time Current & Peak CurrentWithstand Test	40.0 kA for 3 secs 50.0 kA for 3 secs 63.0 kA for 1 sec	BS 159 ; BS 6581 & BSEN 62271-1
Temperature Rise Test	2000 A Upto 6000 A	BS 159 & BS 6581
Corona & RIV Test	Upto 500kV system	NEMA CC-1

IDENTIFICATION MARKING OF CONNECTORS

The following information is punched on ADARSH connector for indentification:

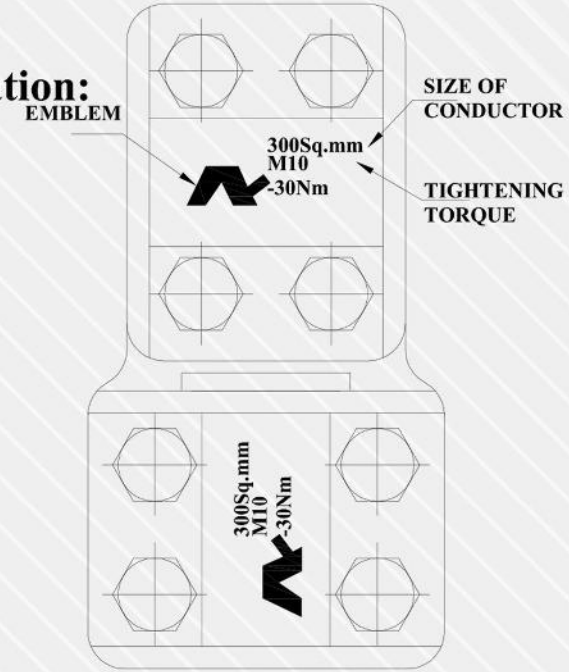

- Company Emblem
- Size of connector /tube / terminal size to be used
- Recommended Tightening Torque for bolted type

PERIODIC MAINTANANCE OF CONNECTORS

- Connectors do not require any special maintanance.
- Its is useful to check the tightness of the bolts once in three years.
- The possibility of loosening of bolts is more in the case of connectors associated with stranded conductors and in Expansion Connectors.
- If a Connector has to be dismantled from the circuit , when it is re-installed, it is essential that Contact Grease be removed from the contact surface and be re-installed thereafter as per Erection Instruction.

PURCHASE SPECIFICATIONS FOR CONNECTORS

THE FOLLOWING INFORMATION IS REQUIRED FOR DESIGNING THE CONNECTORS AND TO GIVE BEST PRICE AT ENQUIRY ORDER STAGE

ENQUIRY STAGE:

- ☐ **SPECIFICATION/STANDARD :**
- ☐ **SYSTEM VOLTAGE IN KV :**
- ☐ **SHORT TIME CURRENT RATING IN KV :**
- ☐ **DURATION IN SECONDS :**
- ☐ **CONTINUOUS CURRENT RATINGS OF :**

  BUSBAR/CONNECTOR: IN AMPS :

  AMBIENT IN °C :

  RISE IN °C :
- ☐ **CORONA EXTINCTION LEVEL IN KV(RMS) :**
- ☐ **RIV LEVEL :**
- ☐ **SIZE AND MATERIAL OF BUSBAR :**
- ☐ **TERMINAL DETAILS :**

  STUD/PAD :

  PAD DRILLING DETAILS :

  MATERIAL (AL/CU) :

  APPROACH (VER/HOR) :

TEE CONNECTOR

Type : CONDR. TO CONDR.

UPTO 145kV

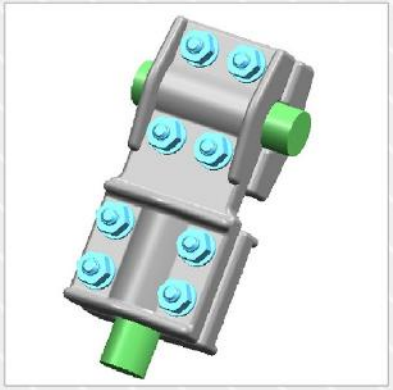

CONDUCTOR SIZE(C Sq.mm)
MAIN WAY 250 TO 1266Sq.mm
BRANCH WAY 250 TO 1266Sq.mm

Type : CONDR. TO CONDR.

UPTO 245kV

CONDUCTOR SIZE(C Sq.mm)
MAIN WAY 250 TO 1266Sq.mm
BRANCH WAY 250 TO 1266Sq.mm

Type : CONDR. TO CONDR.

UPTO 330kV

CONDUCTOR SIZE(C Sq.mm)
MAIN WAY 250 TO 1266Sq.mm
BRANCH WAY 250 TO 1266Sq.mm

TEE CONNECTOR

Type : TUBE TO CONDR.

UPTO 145kV

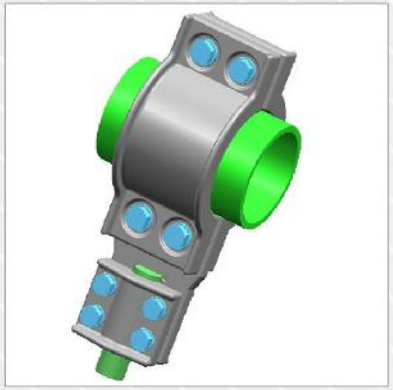

CONDUCTOR SIZE(C Sq.mm)
MAIN WAY 250 TO 1266Sq.mm
BRANCH WAY 250 TO 1266Sq.mm

Type : TUBE TO CONDR.

UPTO 245kV

TUBE SIZE(ØDmm)
MAIN WAY 63 TO 250mm
BRANCH COND250 TO 1266Sq.mm

Type : TUBE TO CONDR.

UPTO 330kV

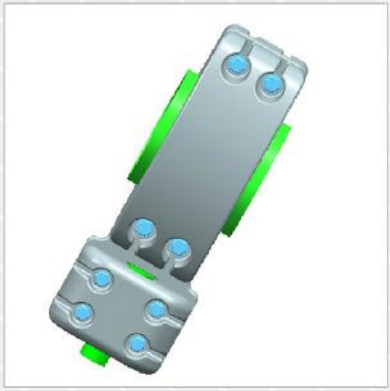

TUBE SIZE(ØDmm)
MAIN WAY 63 TO 250mm
BRANCH COND250 TO 1266Sq.mm

TEE CONNECTOR

Type : TUBE TO TWIN CONDR.

UPTO 145kV

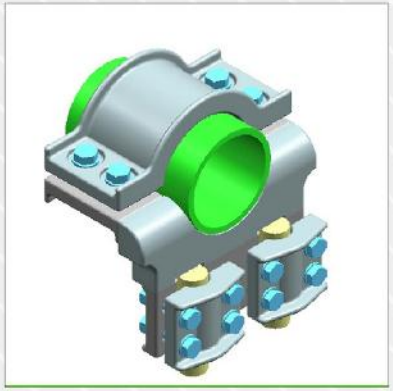

TUBE SIZE(ØDmm)
MAIN WAY 63 TO 160mm
BRANCH COND250 TO 1266Sq.mm

Type : TUBE TO TWIN CONDR.

UPTO 245kV

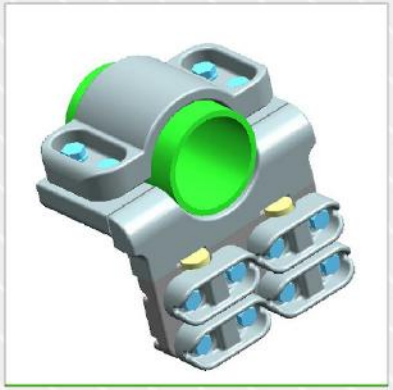

TUBE SIZE(ØDmm)
MAIN WAY 63 TO 250mm
BRANCH COND250 TO 1266Sq.mm

Type : TUBE TO TWIN CONDR.

UPTO 330kV

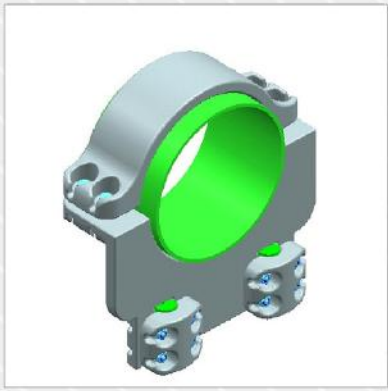

TUBE SIZE(ØDmm)
MAIN WAY 63 TO 250mm
BRANCH COND250 TO 1266Sq.mm

TEE CONNECTOR

Type : TUBE TO TWIN CONDR.-2

UPTO 145kV

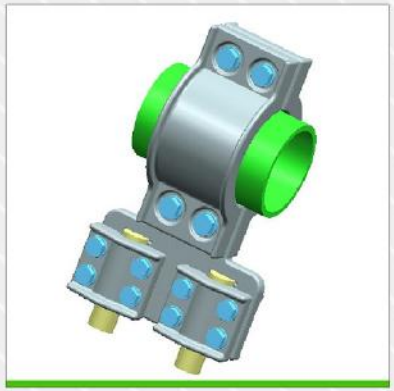

TUBE SIZE(ØDmm)
MAIN WAY 63 TO 160mm
BRANCH COND250 TO 1266Sq.mm

Type : TUBE TO TWIN CONDR.-2

UPTO 245kV

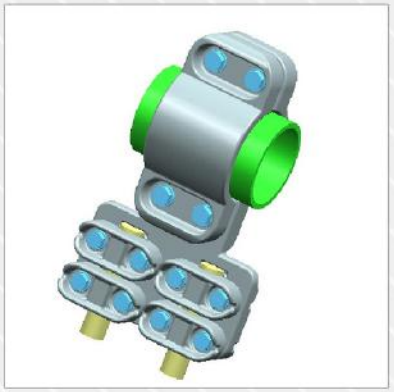

TUBE SIZE(ØDmm)
MAIN WAY 63 TO 160mm
BRANCH COND250 TO 1266Sq.mm

Type : TUBE. TO TWIN CONDR.-2

UPTO 330kV

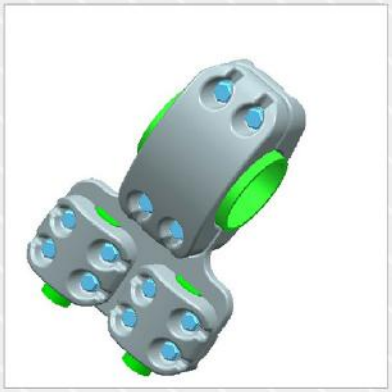

TUBE SIZE(ØDmm)
MAIN WAY 63 TO 250mm
BRANCH COND250 TO 1266Sq.mm

PARALLEL CONNECTOR

Type : CONDR. TO CONDR.

UPTO 145kV

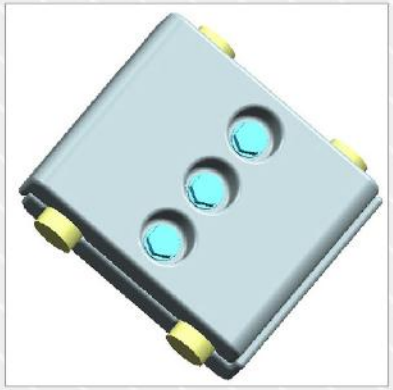

CONDR. SIZE(C Sq.mm)
CONDR. 250 TO 1266Sq.mm
SPACING 100 & 200mm

Type : CONDR. TO CONDR

UPTO 245kV

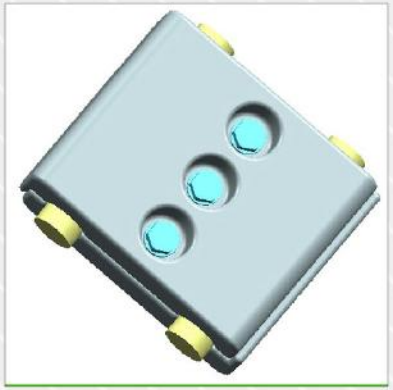

CONDR. SIZE(C Sq.mm)
CONDR. 250 TO 1266Sq.mm
SPACING 100 & 200mm

Type : CONDR. TO CONDR.

UPTO 330kV

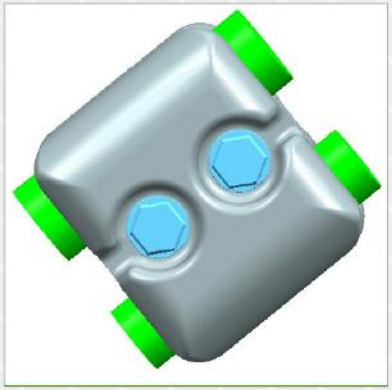

CONDR. SIZE(C Sq.mm)
CONDR. 250 TO 1266Sq.mm
SPACING 100 & 200mm

PARALLEL CONNECTOR

Type : TUBE TO TWIN CONDR.

UPTO 145kV

TUBE 63 TO 160mm
COND SIZE 250 TO 1266Sq.mm
SPACING 100 & 200mm

Type : TUBE TO TWIN CONDR

UPTO 245kV

TUBE 63 TO 250mm
COND SIZE 250 TO 1266Sq.mm
SPACING 100 & 200mm

Type : TUBE TO TWIN CONDR.

UPTO 330kV

TUBE 63 TO 250mm
COND SIZE 250 TO 1266Sq.mm
SPACING 100 & 200mm

SPACER

Type : TWIN CONDR.

UPTO 145kV

COND SIZE 250 TO 1266Sq.mm
SPACING 100 & 200mm

Type : TWIN CONDR

UPTO 245kV

COND SIZE 250 TO 1266Sq.mm
SPACING 100 & 200mm

Type : TWIN CONDR.

UPTO 330kV

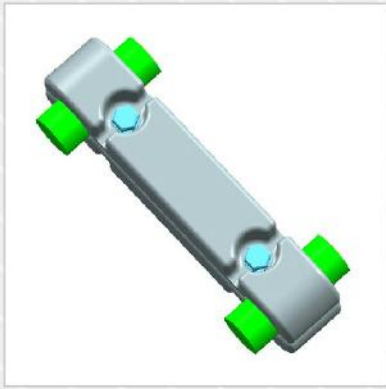

COND SIZE 250 TO 1266Sq.mm
SPACING 100 & 200mm

SPACER

Type : QUAD CONDR.

UPTO 145kV

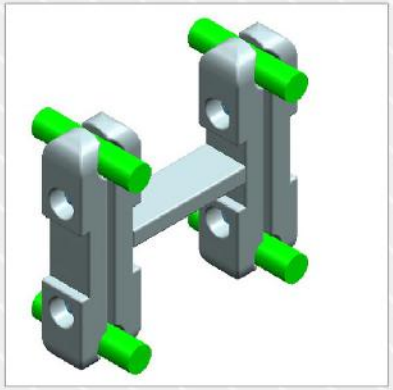

COND SIZE 250 TO 1266Sq.mm
SPACING 200mm

Type : QUAD CONDR

UPTO 245kV

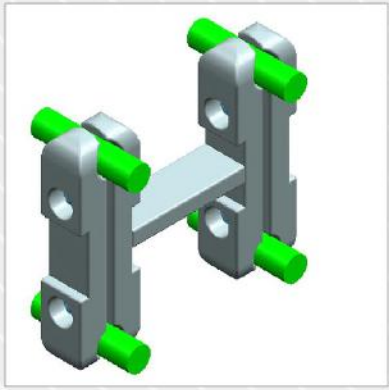

COND SIZE 250 TO 1266Sq.mm
SPACING 200mm

Type : QUAD CONDR

UPTO 330kV

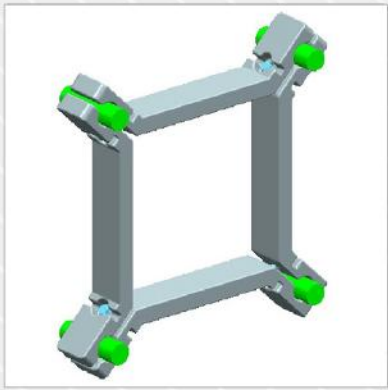

COND SIZE 250 TO 1266Sq.mm
SPACING 200mm

POST INSULATOR CLAMP

Type : RIGID CLAMP ON PI COND

UPTO 145kV

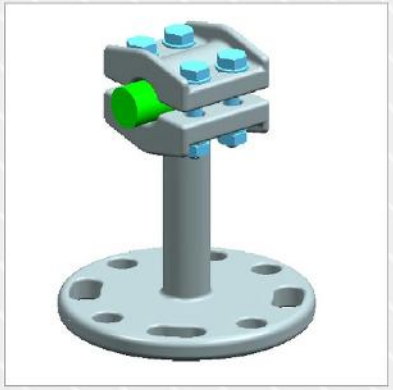

COND SIZE 250 TO 1266Sq.mm
PCD 127mm

Type : RIGID CLAMP ON PI COND

UPTO 245kV

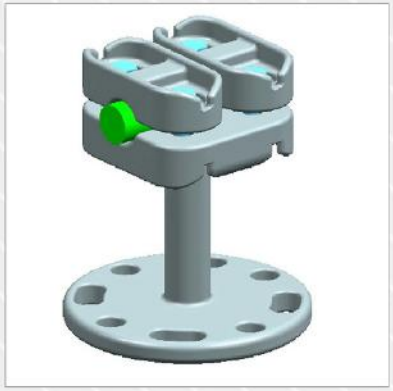

COND SIZE 250 TO 1266Sq.mm
PCD 127mm

Type : RIGID CLAMP ON PI COND

UPTO 330kV

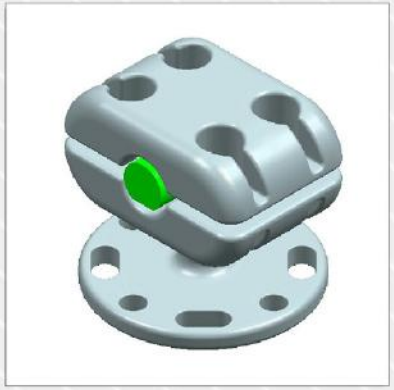

COND SIZE 250 TO 1266Sq.mm
PCD 127mm

POST INSULATOR CLAMP

Type : RIGID ON PI TWIN COND

UPTO 145kV

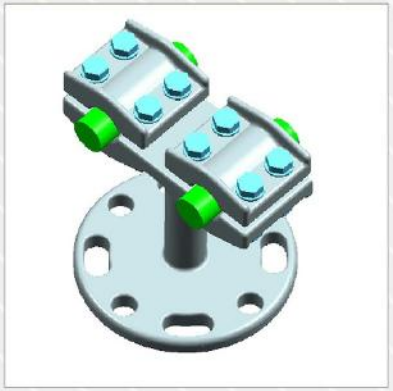

COND SIZE 250 TO 1266Sq.mm
PCD 127mm

Type : RIGID ON PI TWIN COND

UPTO 245kV

COND SIZE 250 TO 1266Sq.mm
PCD 127mm

Type : RIGID ON PI TWIN COND

UPTO 330kV

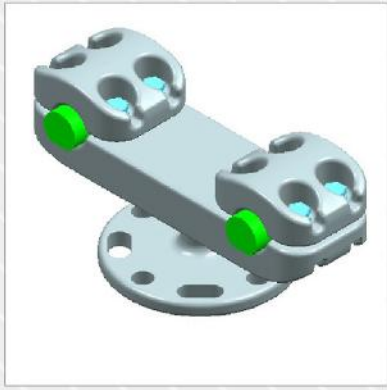

COND SIZE 250 TO 1266Sq.mm
PCD 127mm & 254mm

POST INSULATOR CLAMP

Type : RIGID CLAMP ON PI TUBE

UPTO 145kV

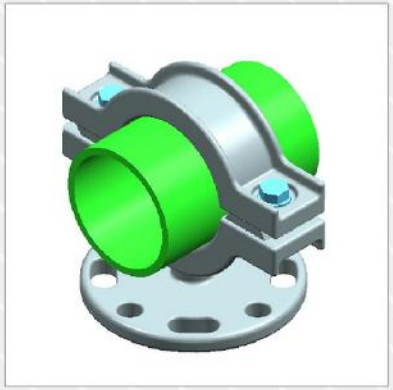

TUBE SIZE 63 TO 160mm
PCD 127mm

Type : RIGID CLAMP ON PI TUBE

UPTO 245kV

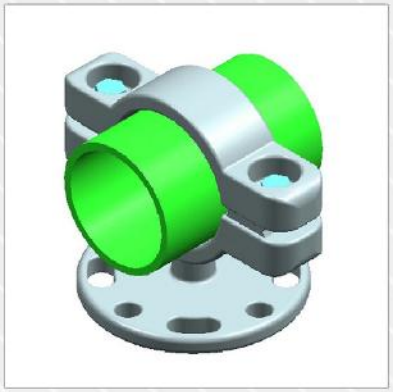

TUBE SIZE 63 TO 250mm
PCD 127mm

Type : RIGID CLAMP ON PI TUBE

UPTO 330kV

TUBE SIZE 63 TO 250mm
PCD 127mm

POST INSULATOR CLAMP

Type : SLIDING ON PI TUBE

UPTO 145kV

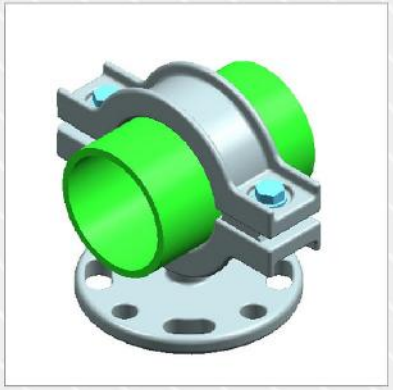

TUBE SIZE 63 TO 160mm
PCD 127mm

Type : SLIDING ON PI TUBE

UPTO 245kV

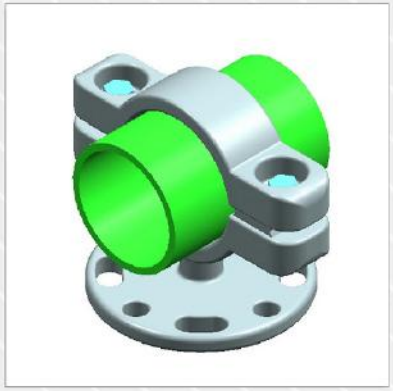

TUBE SIZE 63 TO 250mm
PCD 127mm

Type : SLIDING ON PI TUBE

UPTO 330kV

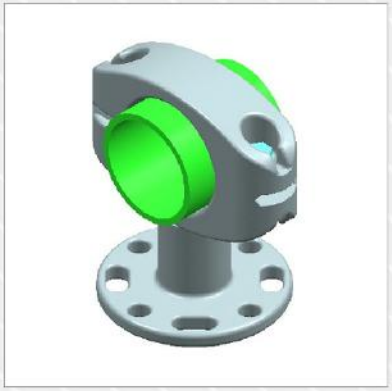

TUBE SIZE 63 TO 250mm
PCD 127mm & 254mm

POST INSULATOR CLAMP

Type : RIGID BUS COUPLER ON PI

UPTO 145kV

TUBE SIZE 63 TO 160mm
PCD 127mm

Type : RIGID BUS COUPLER ON PI

UPTO 245kV

TUBE SIZE 63 TO 250mm
PCD 127mm

Type : RIGID BUS COUPLER ON PI

UPTO 330kV

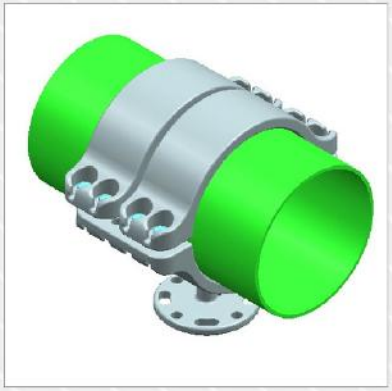

TUBE SIZE 63 TO 250mm
PCD 127mm&254mm

POST INSULATOR CLAMP

Type : EXPN BUS COUPLER ON PI

UPTO 145kV

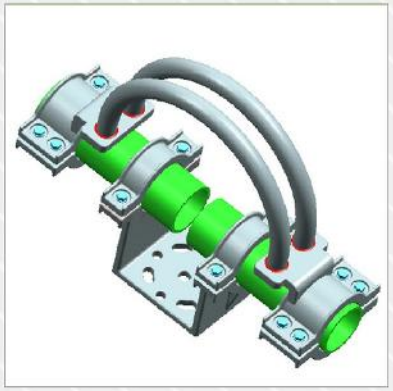

TUBE SIZE 63 TO 160mm
PCD 127mm

Type : EXPN BUS COUPLER ON PI

UPTO 245kV

TUBE SIZE 63 TO 250mm
PCD 127mm

Type : EXPN BUS COUPLER ON PI

UPTO 330kV

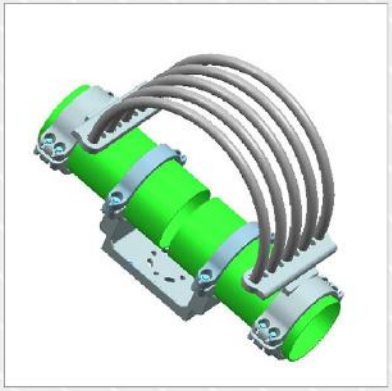

TUBE SIZE 63 TO 250mm
PCD 127mm & 254mm

STRAIGHT CONNECTOR

Type : TUBE TO TUBE

UPTO 145kV

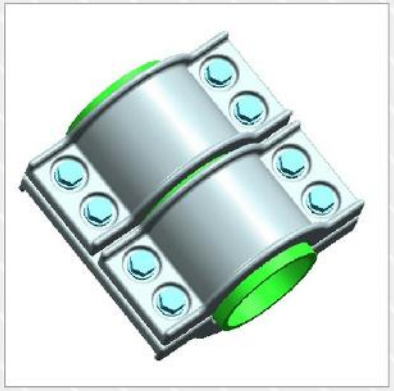

TUBE SIZE 63 TO 160mm

Type : TUBE TO TUBE

UPTO 245kV

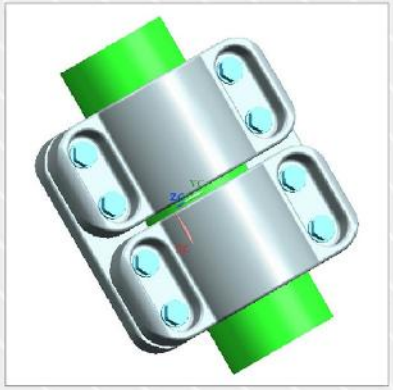

TUBE SIZE 63 TO 250mm

Type : TUBE TO TUBE

UPTO 330kV

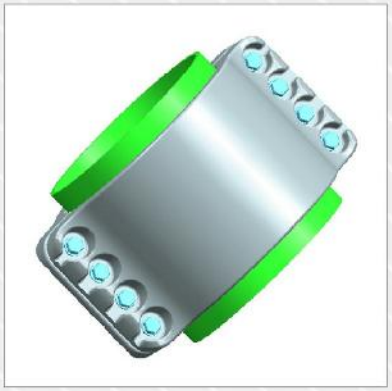

TUBE SIZE 63 TO 250mm

TERMINAL CONNECTOR

Type : STUD TO CONDR. Hoz.

UPTO 145kV

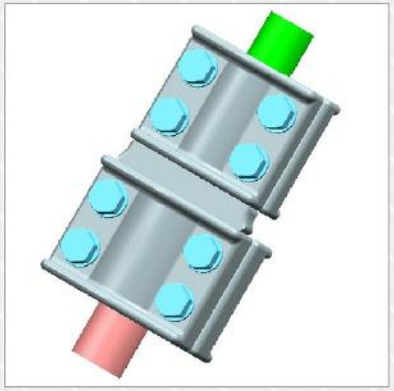

STUD SIZE 30 TO 60mm
COND SIZE 250 TO 1266Sq.mm

Type : STUD TO CONDR. Hoz.

UPTO 245kV

STUD SIZE 30 TO 60mm
COND SIZE 250 TO 1266Sq.mm

Type : STUD TO CONDR. Hoz.

UPTO 330kV

STUD SIZE 30 TO 60mm
COND SIZE 250 TO 1266Sq.mm

TERMINAL CONNECTOR

Type : STUD TO CONDR. VERT.

UPTO 145kV

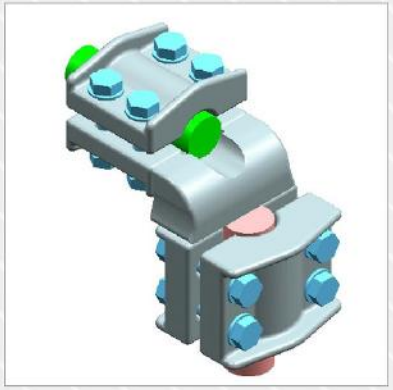

STUD SIZE 30 TO 60mm
CONDR. SIZE 250 TO 1266Sq.mm

Type : STUD TO CONDR. VERT.

UPTO 245kV

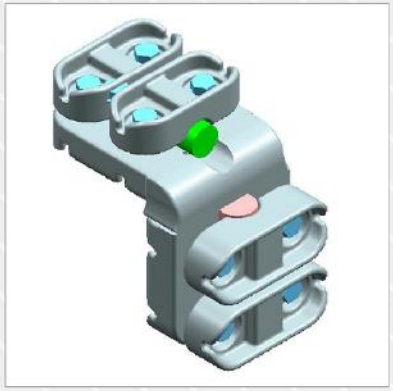

STUD SIZE 30 TO 60mm
CONDR. SIZE 250 TO 1266Sq.mm

Type : STUD TO CONDR. VERT.

UPTO 330kV

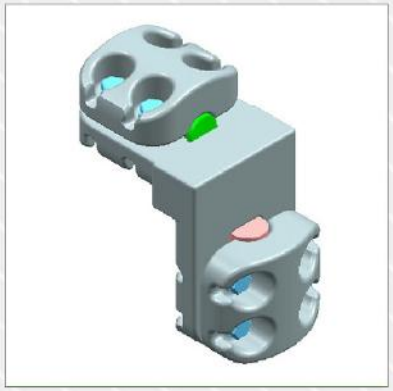

STUD SIZE 30 TO 60mm
CONDR. SIZE 250 TO 1266Sq.mm

TERMINAL CONNECTOR

Type : STUD TO TWIN COND.HOZ

UPTO 145kV

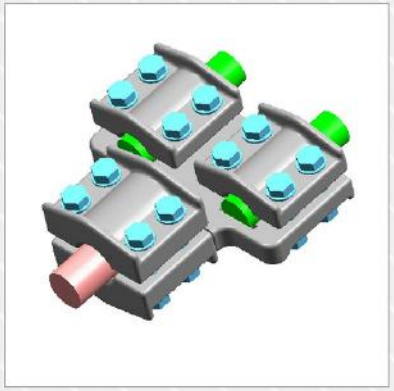

STUD SIZE 30 TO 60mm
CONDR. SIZE 250 TO 1266Sq.mm

Type : STUD TO TWIN COND.HOZ

UPTO 245kV

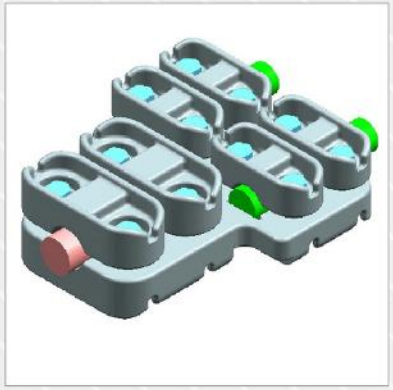

STUD SIZE 30 TO 60mm
CONDR. SIZE 250 TO 1266Sq.mm

Type : STUD TO TWIN COND.HOZ

UPTO 330kV

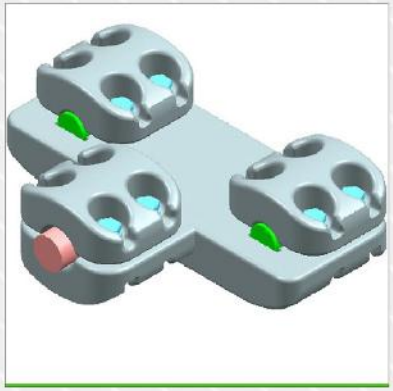

STUD SIZE 30 TO 60mm
CONDR. SIZE 250 TO 1266Sq.mm

TERMINAL CONNECTOR

Type : STUD TO TWIN COND.VERT Type : STUD TO TWIN COND.VERT Type : STUD TO TWIN COND.VERT

UPTO 145kV

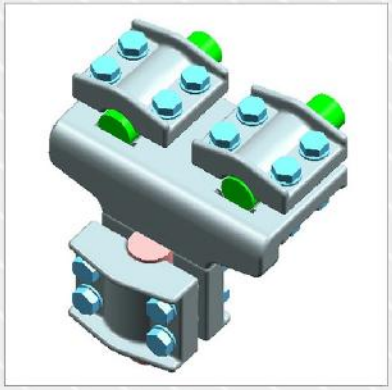

STUD SIZE 30 TO 60mm
CONDR. SIZE 250 TO 1266Sq.mm

UPTO 245kV

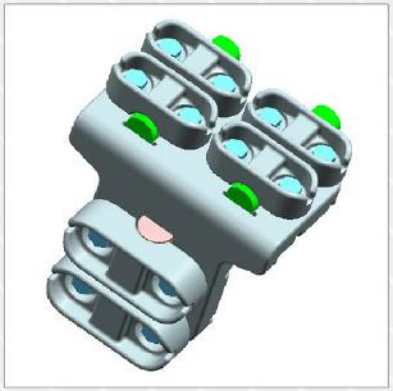

STUD SIZE 30 TO 60mm
CONDR. SIZE 250 TO 1266Sq.mm

UPTO 330kV

STUD SIZE 30 TO 60mm
CONDR. SIZE 250 TO 1266Sq.mm

TERMINAL CONNECTOR

Type : STUD TO TUBE HOZ.

UPTO 145kV

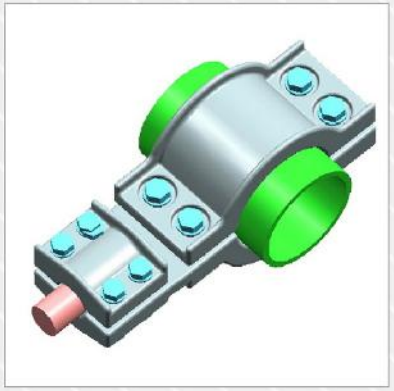

STUD SIZE 30 TO 60mm
TUBE SIZE 63 TO 160mm

Type : STUD TO TUBE HOZ.

UPTO 245kV

STUD SIZE 30 TO 60mm
TUBE SIZE 63 TO 250mm

Type : STUD TO TUBE HOZ.

UPTO 330kV

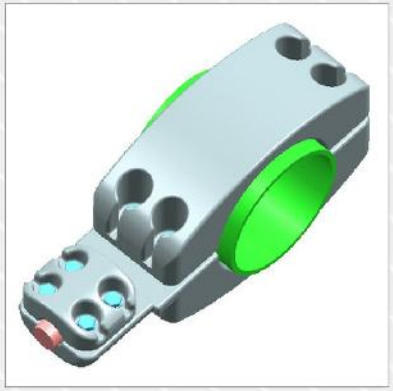

STUD SIZE 30 TO 60mm
TUBE SIZE 63 TO 250mm

TERMINAL CONNECTOR

Type : STUD TO TUBE VERT.

UPTO 145kV

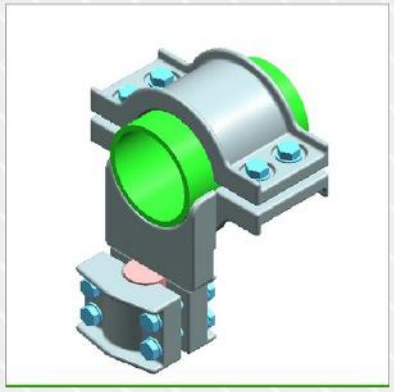

STUD SIZE 30 TO 60mm
TUBE SIZE 63 TO 160mm

Type : STUD TO TUBE VERT.

UPTO 245kV

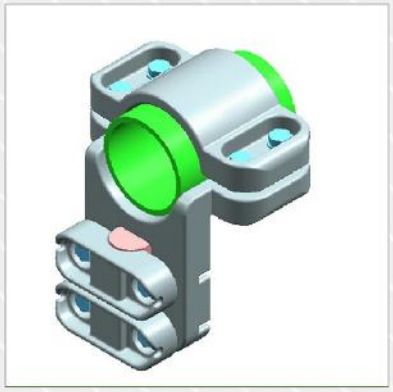

STUD SIZE 30 TO 60mm
TUBE SIZE 63 TO 250mm

Type : STUD TO TUBE VERT.

UPTO 330kV

STUD SIZE 30 TO 60mm
TUBE SIZE 63 TO 250mm

TERMINAL CONNECTOR

Type : STUD TO TUBE EXPN.

UPTO 145kV

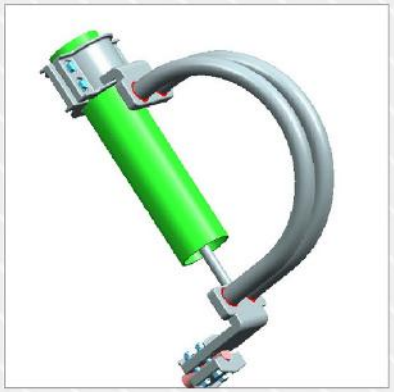

STUD SIZE 30 TO 60mm
TUBE SIZE 63 TO 160mm

Type : STUD TO TUBE EXPN.

UPTO 245kV

STUD SIZE 30 TO 60mm
TUBE SIZE 63 TO 250mm

Type : STUD TO TUBE EXPN.

UPTO 330kV

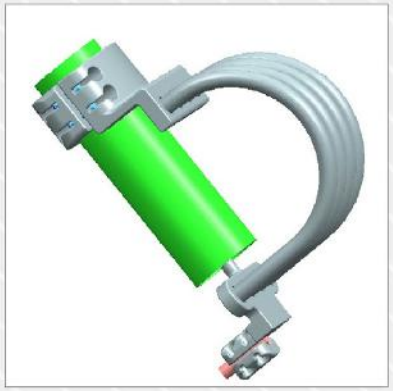

STUD SIZE 30 TO 60mm
TUBE SIZE 63 TO 250mm

TERMINAL CONNECTOR

Type : PAD TO COND. HOZ

UPTO 145kV

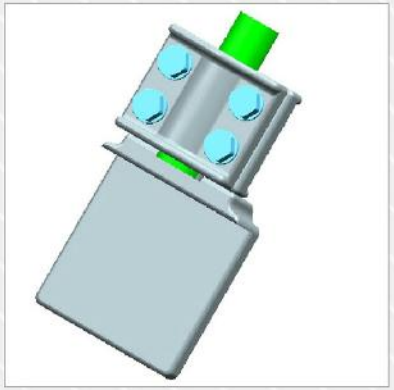

PAD SIZE 100X100 TO 200X200mm
CONDR. SIZE 250 TO 1266Sq.mm

Type : PAD TO COND. HOZ

UPTO 245kV

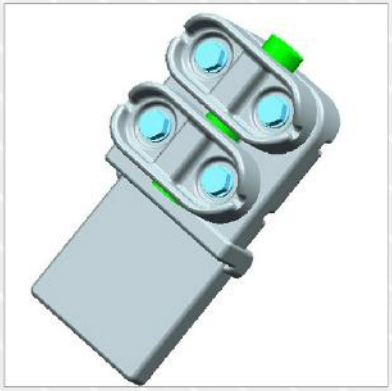

PAD SIZE 100X100 TO 200X200mm
CONDR. SIZE 250 TO 1266Sq.mm

Type : PAD TO COND. HOZ

UPTO 330kV

PAD SIZE 100X100 TO 200X200mm
CONDR. SIZE 250 TO 1266Sq.mm

TERMINAL CONNECTOR

Type : PAD TO COND. VERT.

UPTO 145kV

PAD SIZE 100X100 TO 200X200mm
CONDR. SIZE 250 TO 1266Sq.mm

Type : PAD TO COND. VERT.

UPTO 245kV

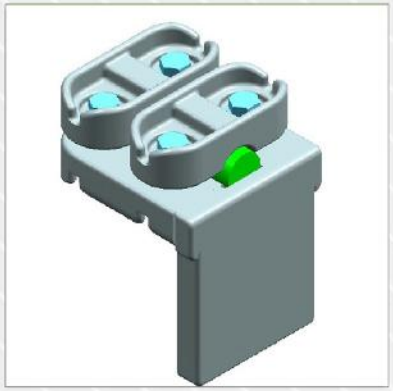

PAD SIZE 100X100 TO 200X200mm
CONDR. SIZE 250 TO 1266Sq.mm

Type : PAD TO COND. VERT.

UPTO 330kV

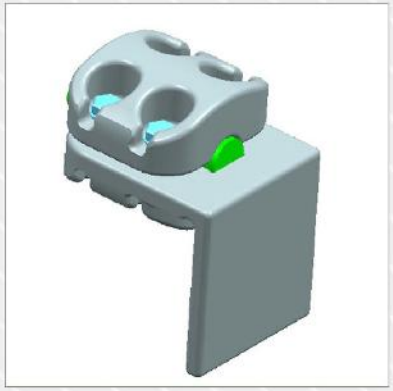

PAD SIZE 100X100 TO 200X200mm
CONDR. SIZE 250 TO 1266Sq.mm

TERMINAL CONNECTOR

Type : PAD TO TUBE HOZ

UPTO 145kV

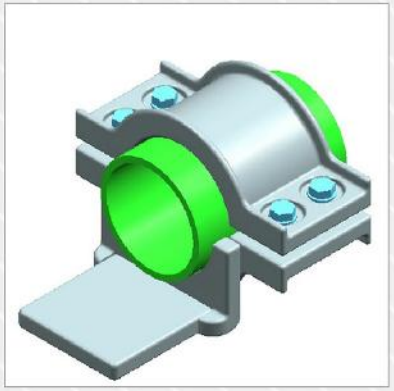

PAD SIZE 100X100 TO 200X200mm
TUBE SIZE 63 TO 160mm

Type : PAD TO TUBE HOZ

UPTO 245kV

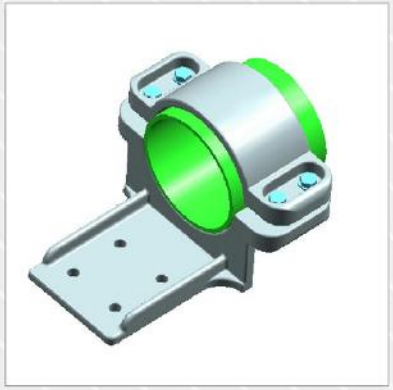

PAD SIZE 100X100 TO 200X200mm
TUBE SIZE 63 TO 250mm

Type : PAD TO TUBE HOZ

UPTO 330kV

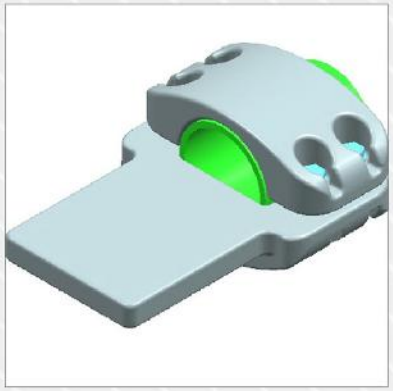

PAD SIZE 100X100 TO 200X200mm
TUBE SIZE 63 TO 250mm

TERMINAL CONNECTOR

Type : PAD TO TUBE EXPAN.

UPTO 145kV

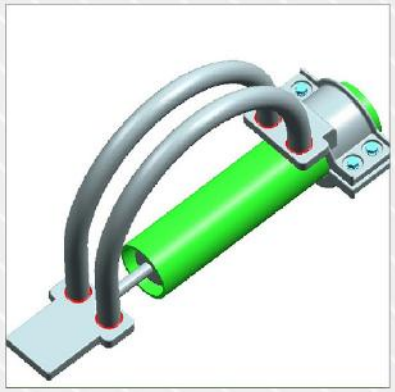

PAD SIZE 100X100 TO 200X200mm
TUBE SIZE 63 TO 160mm

Type : PAD TO TUBE EXPAN.

UPTO 245kV

PAD SIZE 100X100 TO 200X200mm
TUBE SIZE 63 TO 250mm

Type : PAD TO TUBE EXPAN.

UPTO 330kV

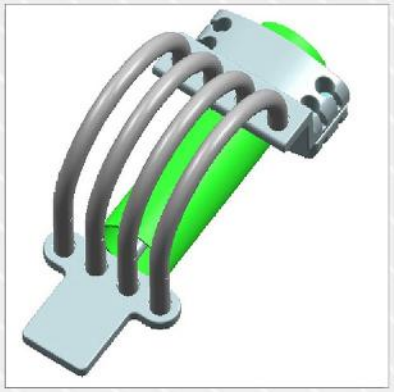

PAD SIZE 100X100 TO 200X200mm
TUBE SIZE 63 TO 250mm

GROUNDING CLAMP

Type : GROUNDING CLAMP

UPTO
145kV

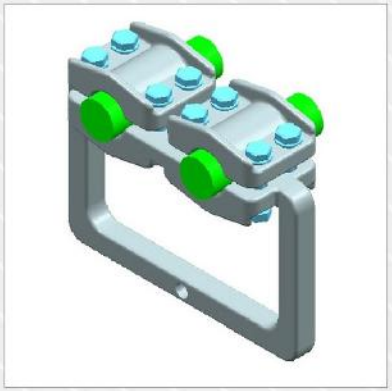

CONDR. SIZE 250 TO 1266Sq.mm
EARTHING BOLT SIZE M8 TO M16

Type : GROUNDING CLAMP

UPTO
245kV

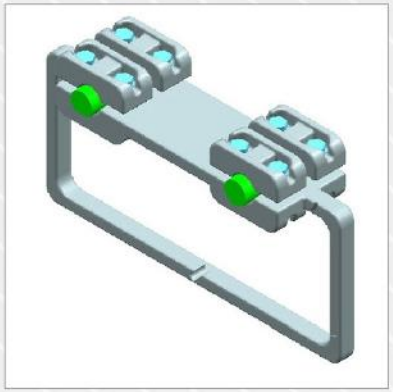

CONDR. SIZE 250 TO 1266Sq.mm
EARTHING BOLT SIZE M8 TO M16

Type : GROUNDING CLAMP

UPTO
330kV

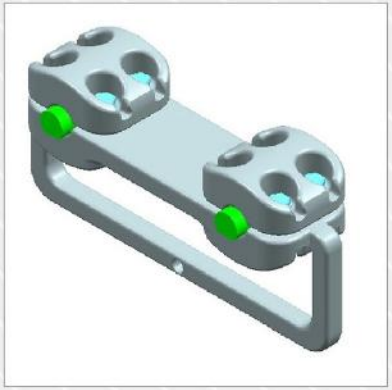

CONDR. SIZE 250 TO 1266Sq.mm
EARTHING BOLT SIZE M8 TO M16

END CAP

Type : END CAP

UPTO
145kV

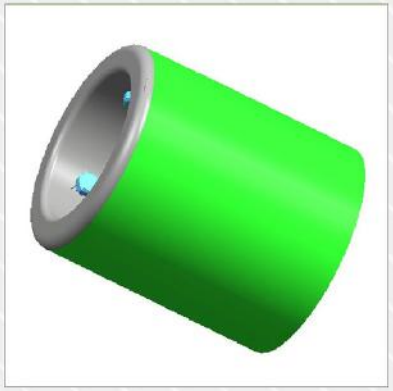

TUBE SIZE 63 TO 160

Type : END CAP

UPTO
245kV

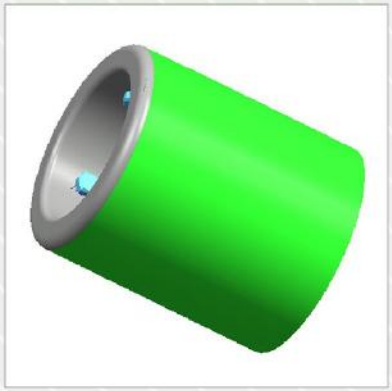

TUBE SIZE 63 TO 250

Type : END CAP

UPTO
330kV

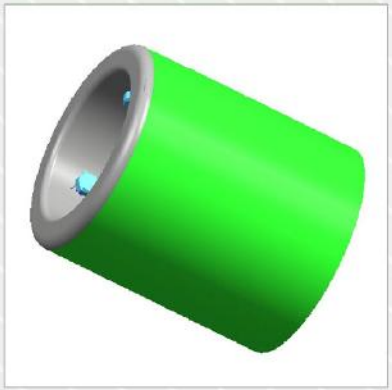

TUBE SIZE 63 TO 250

CORONA BELL

Type : CORONA BELL

UPTO
245kV

TUBE SIZE 63 TO 250mm

Type : CORONA BELL

UPTO
330kV

TUBE SIZE 63 TO 250mm

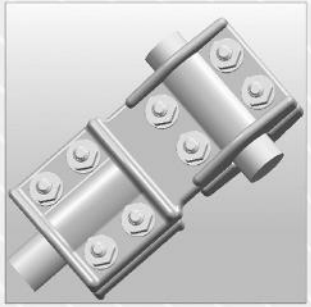

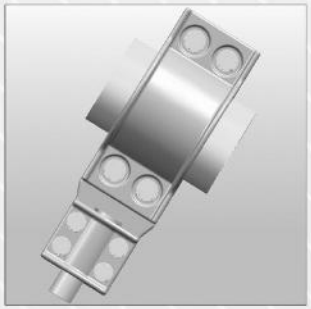

CONNECTORS
400 & 500kV

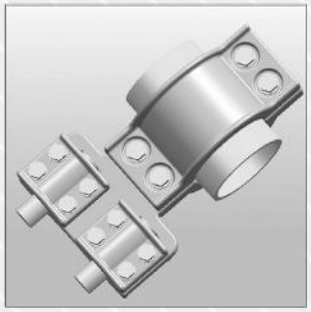

CONTENTS

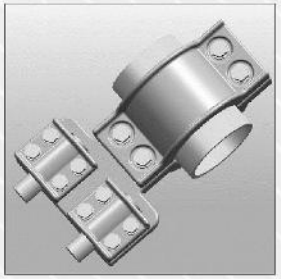

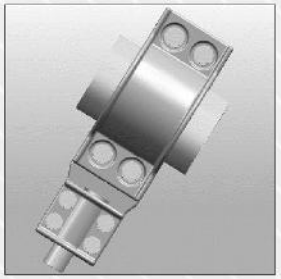

SL.NO.	TITLE	Page No.
I.	Index of 400 kV & 500kV Connector Range	
	I. Busbar Connectors	
	a. Tee Connector	
	i. Conductor to Conductor - through	04
	ii. Tube to Conductor	05
	iii. Tube to Twin Conductor (Type-1)	06
	iv. Tube to Twin Conductor (Type-2)	07
	b. Parallel Connectors	
	i. Conductor to Conductor	08
	c. Spacers	
	i. Quad Conductor	09
	d. Post Insulator Clamps	
	i. Rigid Clamp on PI-Twin Conductor	10
	ii. Rigid Clamp on PI - Tube	11
	iii. Sliding Clamp on PI - Tube	12
	iv. Rigid Bus Coupler on PI	13
	v. Expansion Bus Coupler on PI	14
	e. Straight Connectors	
	i. Tube to Tube	15
	II. Terminal Connectors	
	a. Terminal Connector - Stud	
	i. Stud to Twin Conductor - Hoz.	16
	ii. Stud to Twin Conductor - Vertical	17

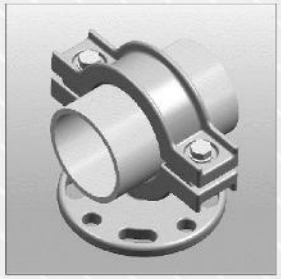

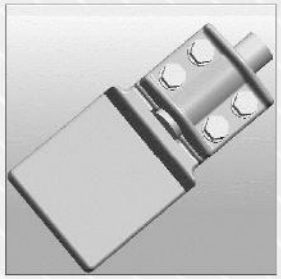

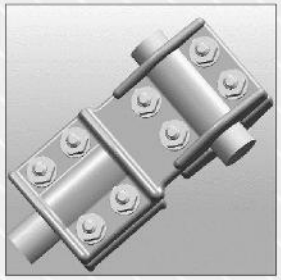

CONTENTS

SL.NO.	TITLE	Page No.
	iii. Stud to Tube - Vertical (Type-2)	18
	b. Terminal Connector - Pad	
	i. Pad to Conductor - Horizontal	19
	ii. Pad to Conductor - Vertical	20
	iii. Pad to Tube - Horizontal	21
	iv. Pad to Tube - expansion	22
	III. Grounding Clamps, End Caps & Corona Bells	
	i. Grounding Clamp	23
	ii. End Clamp	24
	iii. Corona Bell	25
II.	Index of 500 kV Connector Range	
	I. Busbar Connectors	
	a. Tee Connectors	
	i. Conductor to conductor - Through	04
	ii. Tube to Conductor	05
	iii. Tube to Twin Conductor (Type-1)	06
	iv. Tube to Twin Conductor (Type-2)	07
	b. Parallel Connectors	
	i. Conductor to Conductor	08
	c. Spacers	
	i. Quad Conductor	09
	d. Post Insulator Clamps	

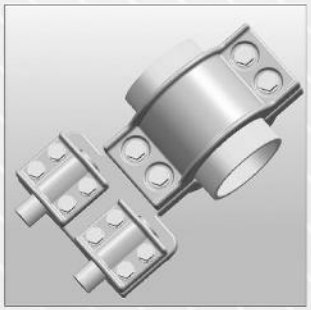

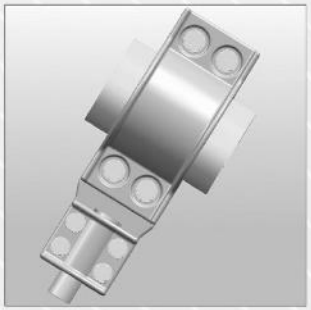

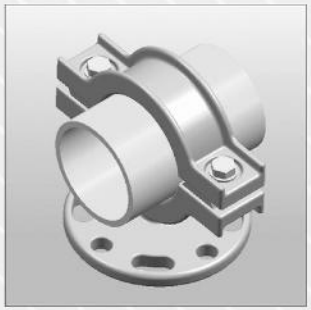

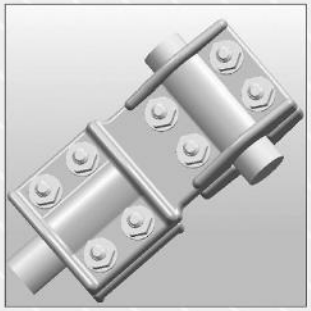

CONTENTS

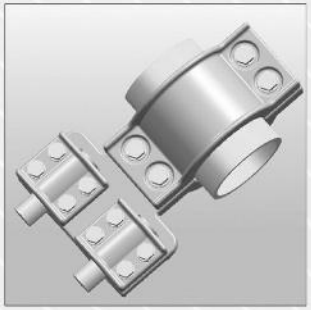

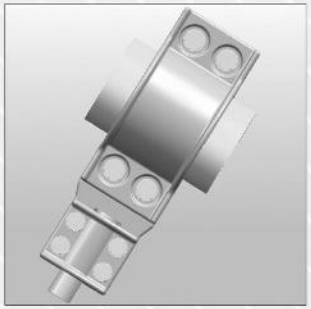

SL.NO.	TITLE	Page No.
	i. Rigid Clamp on PI-Twin Conductor	10
	ii. Rigid Clamp on PI - Tube	11
	iii. Sliding Clamp on PI - Tube	12
	iv. Rigid Bus Coupler on PI	13
	v. Expansion Bus Coupler on PI	14
	e. Straight Connectors	
	i. Tube to Tube	15
	II. Terminal Connectors	
	a. Terminal Connector - Stud	
	i. Stud to Twin Conductor - Hoz.	16
	ii. Stud to Twin Conductor - Vertical	17
	iii. Stud to Tube - Vertical (Type-2)	18
	b. Terminal Connector - Pad	
	i. Pad to Conductor - Horizontal	19
	ii. Pad to Conductor - Vertical	20
	iii. Pad to Tube - Horizontal	21
	iv. Pad to Tube - expansion	22
	III. Grounding Clamps, End Caps & Corona Bells	
	i. Grounding Clamp	23
	ii. End Clamp	24
	iii. Corona Bell	25

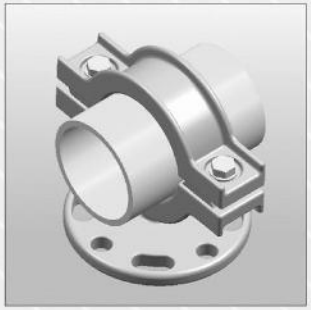

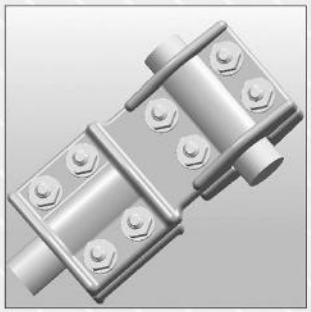

TEE CONNECTOR

Type : CONDR. TO CONDR.

UPTO
400kV

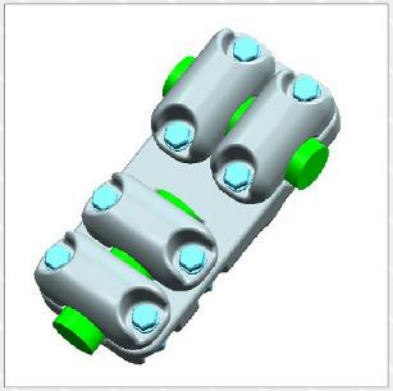

CONDUCTOR SIZE(C Sq.mm)
MAIN WAY 250 TO 1266Sq.mm
BRANCH WAY 250 TO 1266Sq.mm

Type : CONDR. TO CONDR.

UPTO
500kV

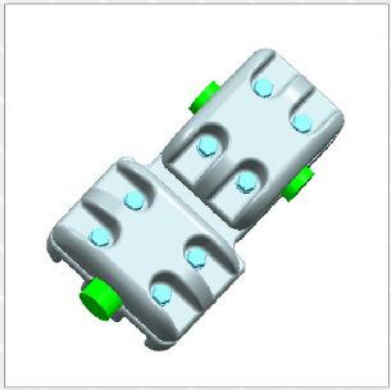

CONDUCTOR SIZE(C Sq.mm)
MAIN WAY 250 TO 1266Sq.mm
BRANCH WAY 250 TO 1266Sq.mm

TEE CONNECTOR

Type : TUBE TO CONDR.

UPTO
400kV

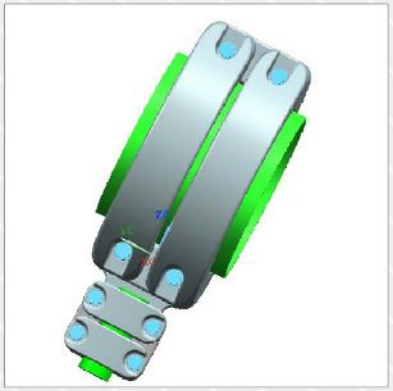

TUBE SIZE(ØDmm)
MAIN WAY 63 TO 250mm
BRANCH WAY 250 TO 1266Sq.mm

Type : TUBE TO CONDR.

UPTO
500kV

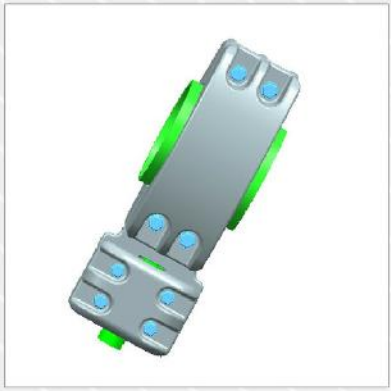

TUBE SIZE(ØDmm)
MAIN WAY 63 TO 250mm
BRANCH COND250 TO 1266Sq.mm

TEE CONNECTOR

Type : TUBE TO TWIN CONDR.

UPTO
400kV

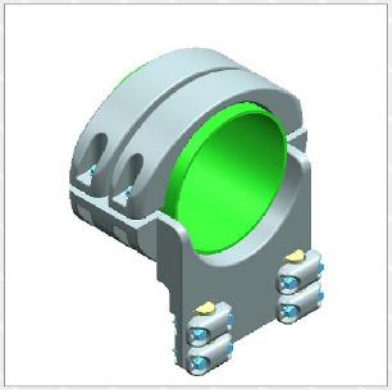

TUBE SIZE(ØDmm)
MAIN WAY 63 TO 160mm
BRANCH COND250 TO 1266Sq.mm

Type : TUBE TO TWIN CONDR.

UPTO
500kV

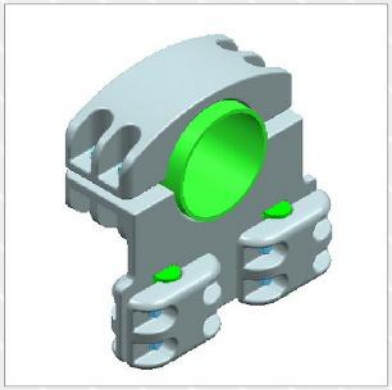

TUBE SIZE(ØDmm)
MAIN WAY 63 TO 250mm
BRANCH COND250 TO 1266Sq.mm

TEE CONNECTOR

Type : TUBE TO TWIN CONDR.-2

UPTO
400kV

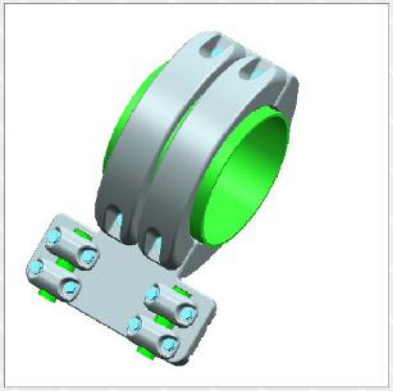

TUBE SIZE(ØDmm)
MAIN WAY 63 TO 250mm
BRANCH COND250 TO 1266Sq.mm

Type : TUBE. TO TWIN CONDR.-2

UPTO
500kV

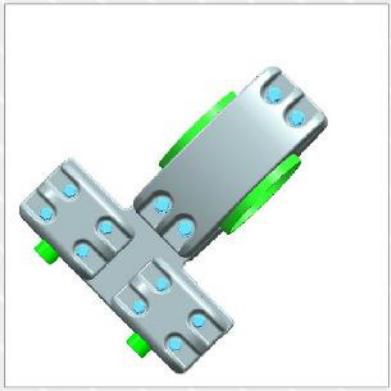

TUBE SIZE(ØDmm)
MAIN WAY 63 TO 250mm
BRANCH COND250 TO 1266Sq.mm

PARALLEL CONNECTOR

Type : CONDR. TO CONDR.

UPTO
400kV

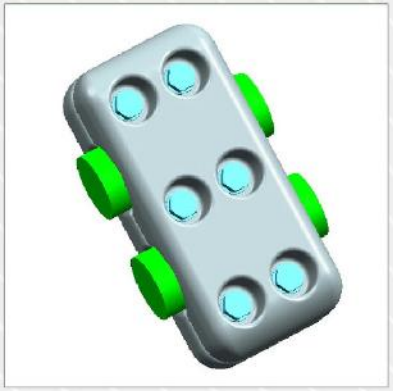

CONDR. SIZE(C Sq.mm)
CONDR. 250 TO 1266Sq.mm
SPACING 100 & 200mm

Type : CONDR. TO CONDR.

UPTO
500kV

CONDR. SIZE(C Sq.mm)
CONDR. 250 TO 1266Sq.mm
SPACING 100 & 200mm

SPACER

Type : QUAD CONDR.

UPTO
400kV

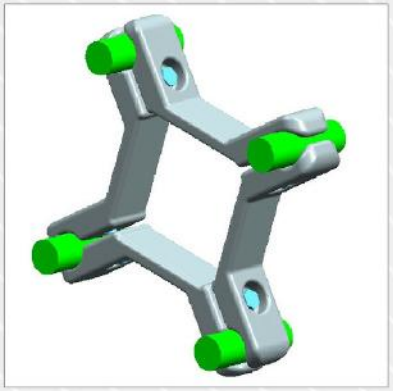

COND SIZE 250 TO 1266Sq.mm
SPACING 100 TO 400mm

Type : QUAD CONDR

UPTO
500kV

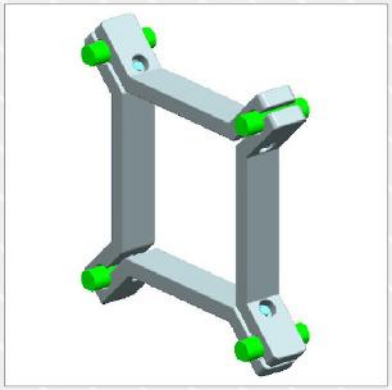

COND SIZE 250 TO 1266Sq.mm
SPACING 100 TO 400mm

POST INSULATOR CLAMP

Type : RIGID ON PI TWIN COND

UPTO
400kV

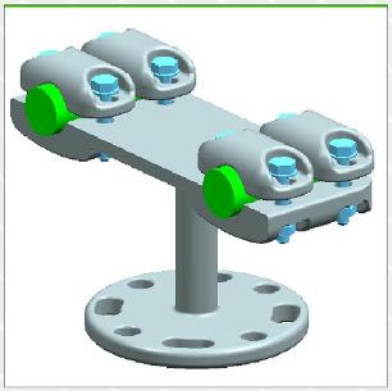

COND SIZE 250 TO 1266Sq.mm
PCD 127mm & 254mm

Type : RIGID ON PI TWIN COND

UPTO
500kV

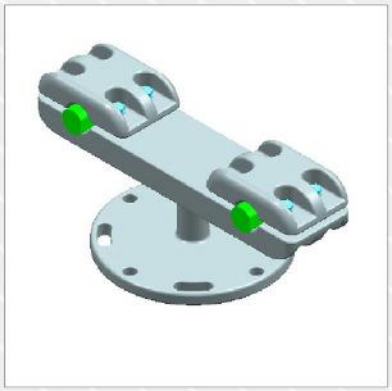

COND SIZE 250 TO 1266Sq.mm
PCD 127mm & 254mm

POST INSULATOR CLAMP

Type : RIGID CLAMP ON PI TUBE

UPTO
400kV

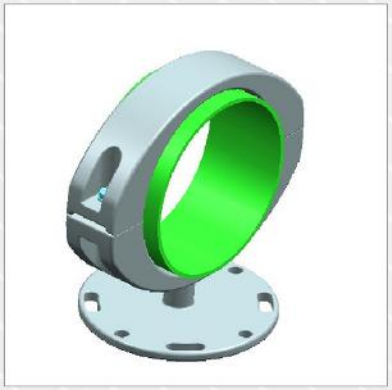

TUBE SIZE 63 TO 250mm
PCD 127mm & 254mm

Type : RIGID CLAMP ON PI TUBE

UPTO
500kV

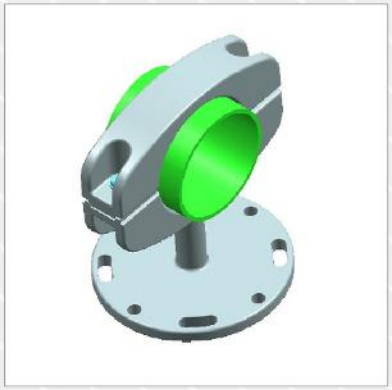

TUBE SIZE 63 TO 250mm
PCD 127mm & 254mm

POST INSULATOR CLAMP

Type : SLIDING ON PI TUBE

UPTO
400kV

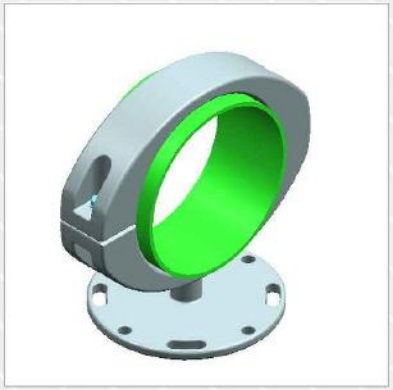

TUBE SIZE 63 TO 250mm
PCD 127mm & 254mm

Type : SLIDING ON PI TUBE

UPTO
500kV

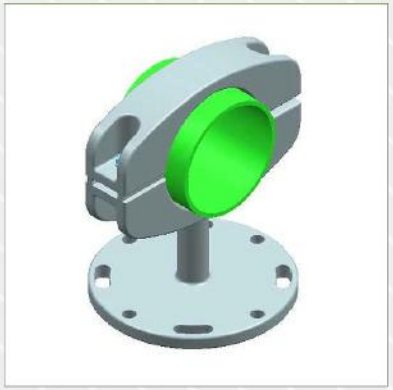

TUBE SIZE 63 TO 250mm
PCD 127mm & 254mm

POST INSULATOR CLAMP

Type : RIGID BUS COUPLER ON PI

UPTO
400kV

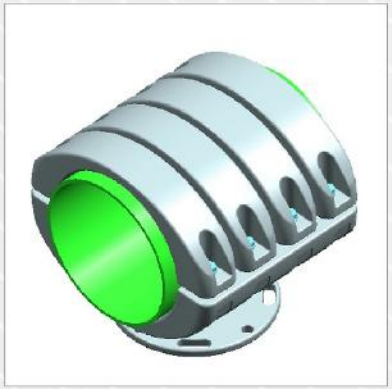

TUBE SIZE 63 TO 250mm
PCD 127mm & 254mm

Type : RIGID BUS COUPLER ON PI

UPTO
500kV

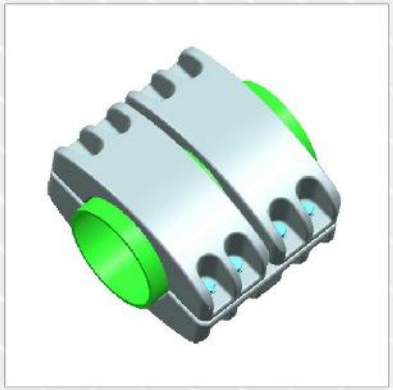

TUBE SIZE 63 TO 250mm
PCD 127mm&254mm

POST INSULATOR CLAMP

Type : EXPN BUS COUPLER ON PI

UPTO
400kV

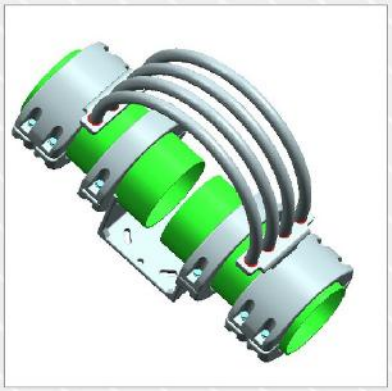

TUBE SIZE 63 TO 250mm
PCD 127mm & 254mm

Type : EXPN BUS COUPLER ON PI

UPTO
500kV

TUBE SIZE 63 TO 250mm
PCD 127mm & 254mm

STRAIGHT CONNECTOR

Type : TUBE TO TUBE

UPTO
400kV

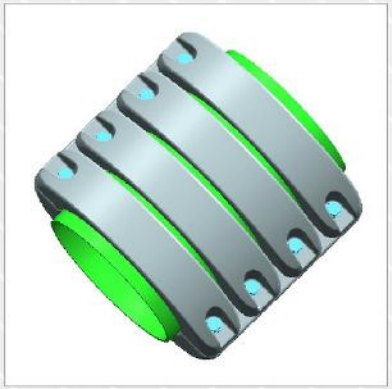

TUBE SIZE 63 TO 250mm

Type : TUBE TO TUBE

UPTO
500kV

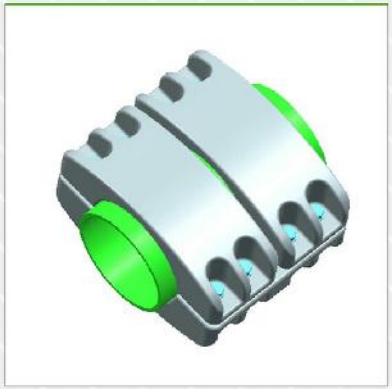

TUBE SIZE 63 TO 250mm

TERMINAL CONNECTOR

Type : STUD TO TWIN COND.HOZ

UPTO
400kV

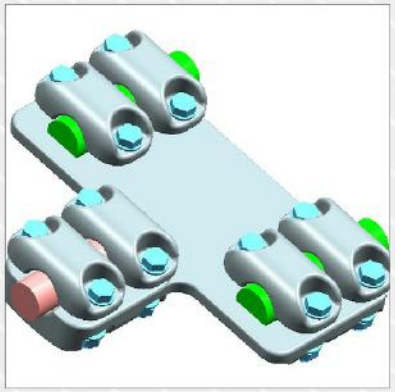

STUD SIZE 30 TO 60mm
CONDR. SIZE 250 TO 1266Sq.mm

Type : STUD TO TWIN COND.HOZ

UPTO
500kV

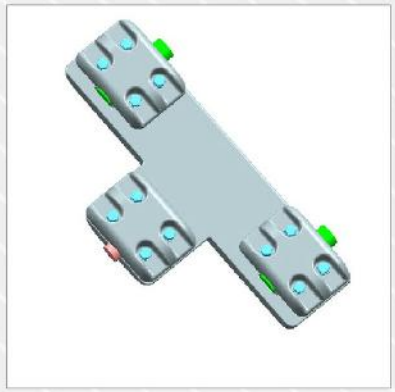

STUD SIZE 30 TO 60mm
CONDR. SIZE 250 TO 1266Sq.mm

TERMINAL CONNECTOR

Type : STUD TO TWIN COND.VERT

UPTO
400kV

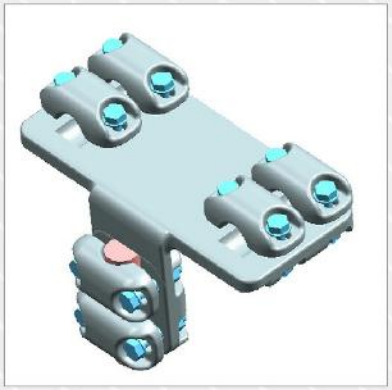

STUD SIZE 30 TO 60mm
CONDR. SIZE 250 TO 1266Sq.mm

Type : STUD TO TWIN COND.VERT

UPTO
500kV

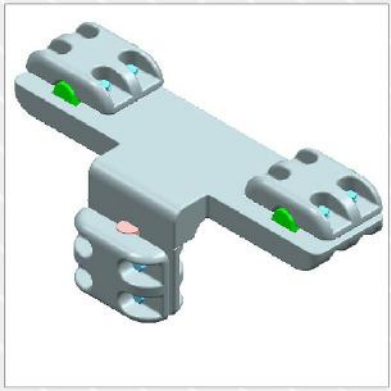

STUD SIZE 30 TO 60mm
CONDR. SIZE 250 TO 1266Sq.mm

TERMINAL CONNECTOR

Type : STUD TO TUBE VERT.2

UPTO
400kV

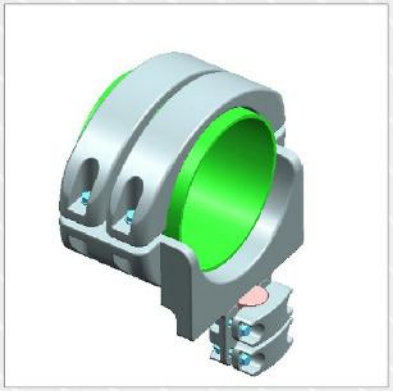

STUD SIZE 30 TO 60mm
TUBE SIZE 63 TO 160mm

Type : STUD TO TUBE VERT.2

UPTO
500kV

STUD SIZE 30 TO 60mm
TUBE SIZE 63 TO 250mm

TERMINAL CONNECTOR

Type : PAD TO CONDUCTOR HOZ.

UPTO
400kV

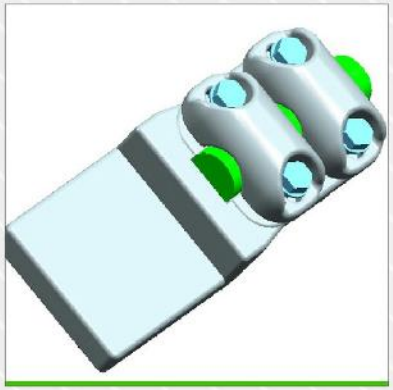

PAD SIZE 100X100 TO 200X200mm
CONDR. SIZE 250 TO 1266Sq.mm

Type : PAD TO CONDUCTOR HOZ.

UPTO
500kV

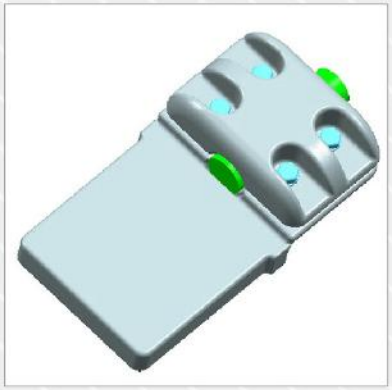

PAD SIZE 100X100 TO 200X200mm
CONDR. SIZE 250 TO 1266Sq.mm

TERMINAL CONNECTOR

Type : PAD TO COND. VERT.

UPTO
400kV

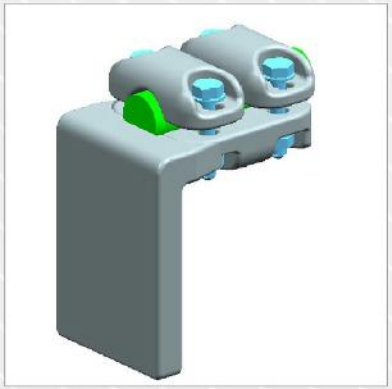

PAD SIZE 100X100 TO 200X200mm
CONDR. SIZE 250 TO 1266Sq.mm

Type : PAD TO COND. VERT.

UPTO
500kV

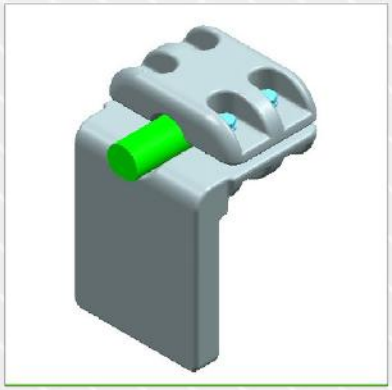

PAD SIZE 100X100 TO 200X200mm
CONDR. SIZE 250 TO 1266Sq.mm

TERMINAL CONNECTOR

Type : PAD TO TUBE HOZ

UPTO
400kV

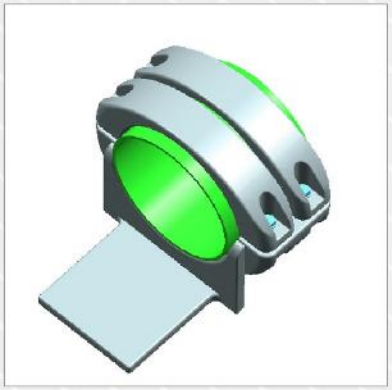

PAD SIZE 100X100 TO 200X200mm
TUBE SIZE 63 TO 250mm

Type : PAD TO TUBE HOZ

UPTO
500kV

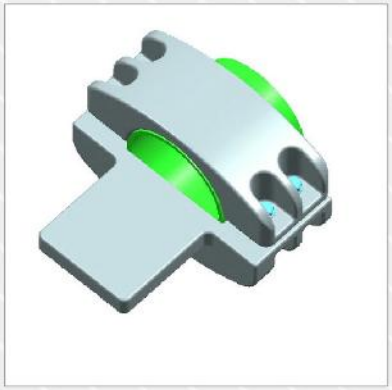

PAD SIZE 100X100 TO 200X200mm
TUBE SIZE 63 TO 250mm

TERMINAL CONNECTOR

Type : PAD TO TUBE EXPAN.

UPTO
400kV

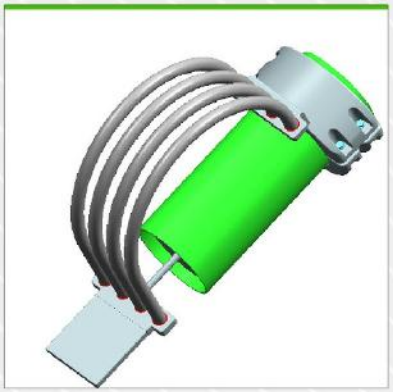

PAD SIZE 100X100 TO 200X200mm
TUBE SIZE 63 TO 250mm

Type : PAD TO TUBE EXPAN.

UPTO
500kV

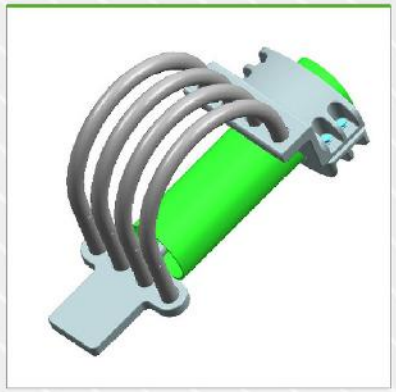

PAD SIZE 100X100 TO 200X200mm
TUBE SIZE 63 TO 250mm

GROUNDING CLAMP

Type : GROUNDING CLAMP

UPTO
400kV

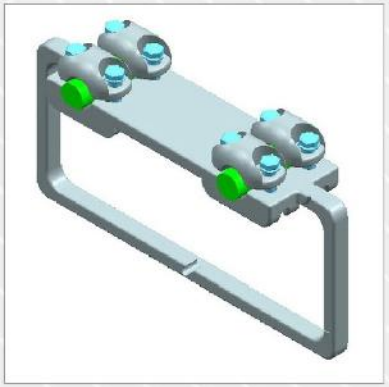

CONDR. SIZE 250 TO 1266Sq.mm

Type : GROUNDING CLAMP

UPTO
500kV

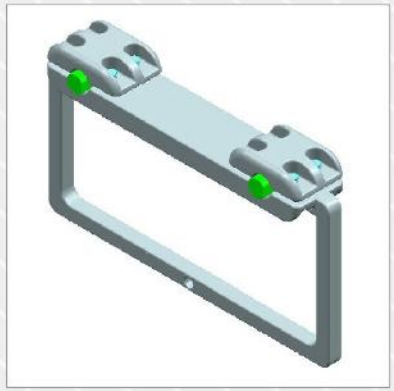

CONDR. SIZE 250 TO 1266Sq.mm

END CAP

Type : END CAP

UPTO
400kV

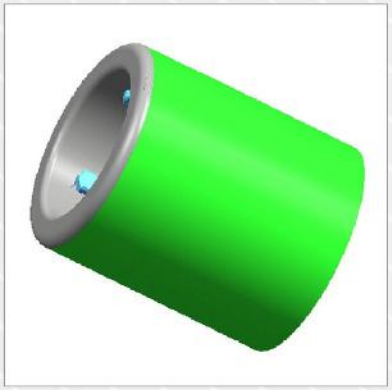

TUBE SIZE 63 TO 250

Type : END CAP

UPTO
500kV

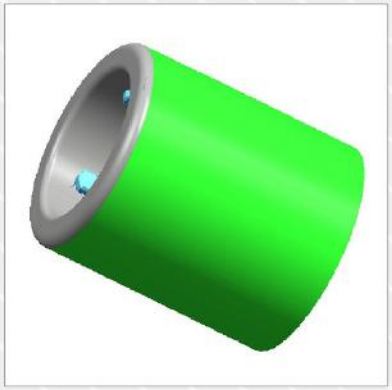

TUBE SIZE 63 TO 250

CORONA BELL

Type : CORONA BELL

UPTO
400kV

TUBE SIZE 63 TO 250mm

Type : CORONA BELL

UPTO
500kV

TUBE SIZE 63 TO 250mm

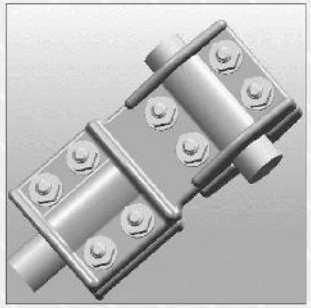

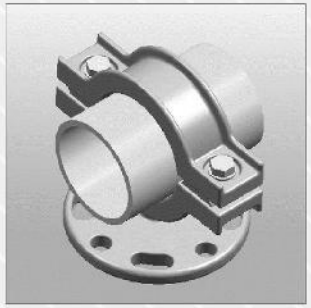

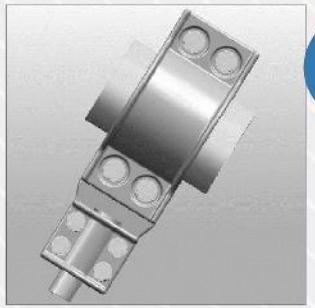

COMPRESSION CONNECTORS

(UPTO 500kV SYSTEMS)

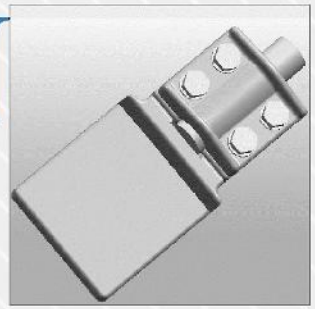

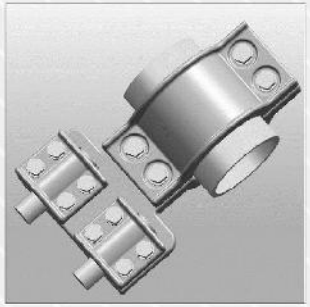

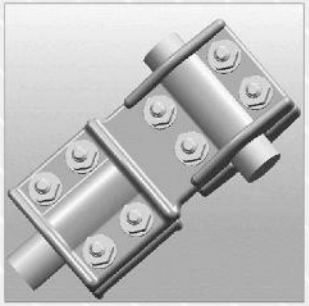

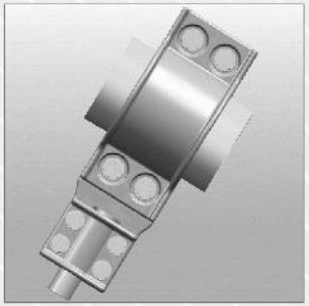

SL.NO.	TITLE	Page No.
I.	Index of Compression connectors	
	I. Busbar Connectors	
	a. Tee Connector	
	i. Tube to Twin Conductor (Type-1)	01
	ii. Conductor to Conductor (Type-1)	01
	iii.Conductor toTwin Conductor(Type-1)	01
	b. Parallel Connectors	
	i. Conductor to Conductor	02
	ii. Tube to Conductor	02
	iii. Tube to Twin Conductor	02
	II. Terminal Connectors	
	a. Terminal Connector - Stud	
	i. Stud to Conductor - Horizontal	03
	ii. Stud to Conductor - Vertical	03
	iii. Stud to Twin Conductor - Hoz.	03
	iv. Stud to Twin Conductor - Vertical	04
	b. Terminal Connector - Pad	
	i. Pad to Conductor - Horizontal	04
	ii. Pad to Twin Conductor - Hoz.	04

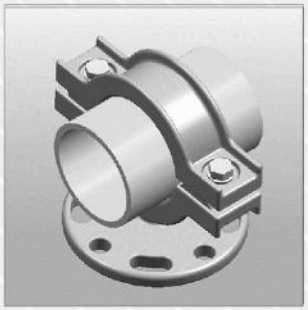

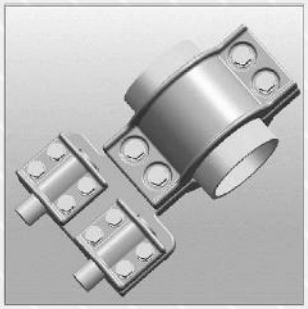

TEE CONNECTOR

Type : TUBE TO TWIN CONDR.

TUBE SIZE(ØDmm)
MAIN WAY 63 TO 250mm
BRANCH COND150 TO 1266Sq.mm

Type : CONDR. TO CONDR.

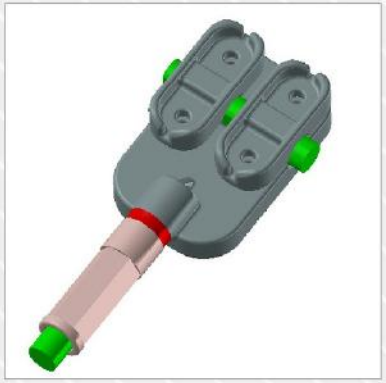

CONDR. SIZE(ØDmm)
MAIN WAY 150 TO 1266mm
BRANCH COND150 TO 1266Sq.mm

Type : CONDR. TO TWIN CONDR.

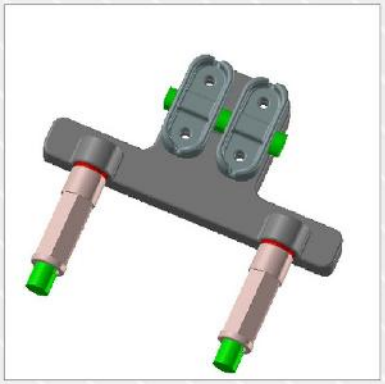

CONDR. SIZE(ØDmm)
MAIN WAY 150 TO 1266mm
BRANCH COND150 TO 1266Sq.mm

PARALLEL CONNECTOR

Type : CONDR. TO CONDR

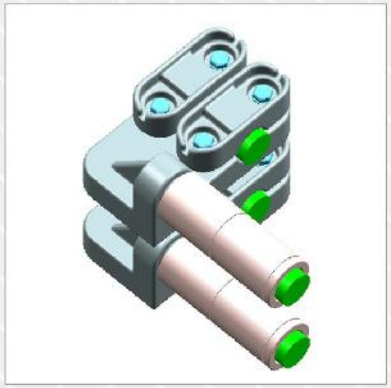

CONDR. SIZE(C Sq.mm)
CONDR. 250 TO 1266Sq.mm
SPACING 100 & 200mm

Type : TUBE TO CONDR

TUBE 63 TO 250mm
COND SIZE 250 TO 1266Sq.mm
SPACING 100 & 200mm

Type : TUBE TO TWIN CONDR

TUBE 63 TO 250mm
COND SIZE 250 TO 1266Sq.mm
SPACING 100 & 200mm

TERMINAL CONNECTOR

Type : STUD TO CONDR. Hoz.

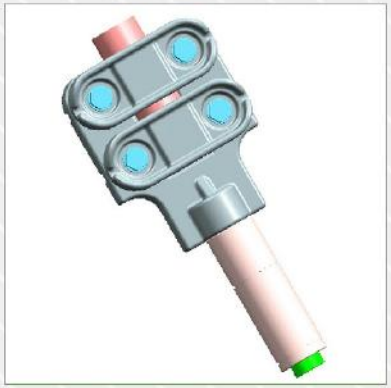

STUD SIZE 30 TO 60mm
COND SIZE 250 TO 1266Sq.mm

Type : STUD TO CONDR. VERT.

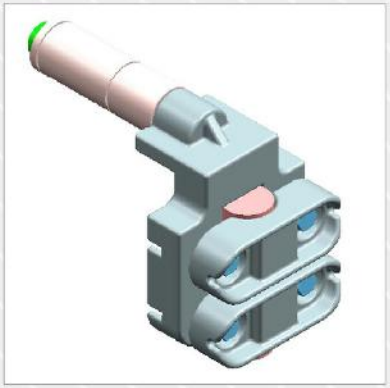

STUD SIZE 30 TO 60mm
CONDR. SIZE 250 TO 1266Sq.mm

Type : STUD TO TWIN COND.HOZ

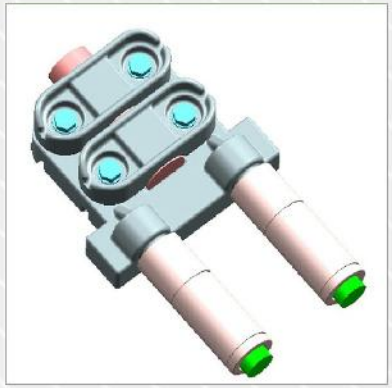

STUD SIZE 30 TO 60mm
CONDR. SIZE 250 TO 1266Sq.mm

TERMINAL CONNECTOR

Type : STUD TO TWIN COND.VERT

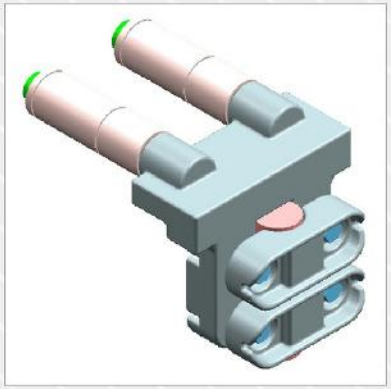

STUD SIZE 30 TO 60mm
CONDR. SIZE 250 TO 1266Sq.mm

Type : PAD TO COND. HOZ

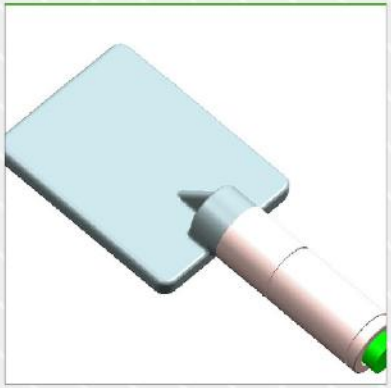

PAD SIZE 100X100 TO 200X200mm
CONDR. SIZE 250 TO 1266Sq.mm

Type : PAD TO TWIN COND. HOZ

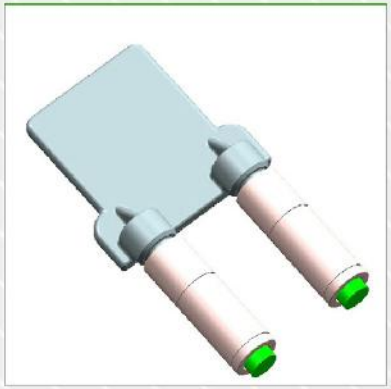

PAD SIZE 100X100 TO 200X200mm
CONDR. SIZE 250 TO 1266Sq.mm

Designed, Manufactured & Marketed by

ADARSH LINE ACCESSORIES PVT. LTD

321, SIDCO Industrial Estate, North Phase
Ambattur, Chennai- 600 098, INDIA.

+91-98405 51875

info@adarshconnectors.com

91-44-42060007
91-44-42060008

www.adarshconnectors.in